SERVICE MANUAL

MODEL	COMMANDER DEST.
PFM-500A1WU	RM-921 US/CND
PFM-500A1WE	RM-921 AEP

MODEL	COMMANDER DEST.
MB-514	US/CND AEP

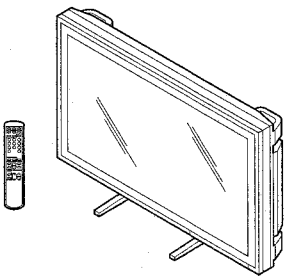

FLAT PANEL MONITOR

SONY

⚠WARNING

This manual is intended for qualified service personnel only.
To reduce the risk of electric shock, fire or injury, do not perform any servicing other than that contained in the operating instructions unless you are qualified to do so. Refer all servicing to qualified service personnel.

WARNING!!

AN ISOLATION TRANSFORMER SHOULD BE USED DURING ANY SERVICE TO AVOID POSSIBLE SHOCK HAZARD, BECAUSE OF LIVE CHASSIS. THE CHASSIS OF THIS RECEIVER IS DIRECTLY CONNECTED TO THE AC POWER LINE.

SAFETY-RELATED COMPONENT WARNING!!

COMPONENTS IDENTIFIED BY SHADING AND MARK ⚠ ON THE SCHEMATIC DIAGRAMS, EXPLODED VIEWS AND IN THE PARTS LIST ARE CRITICAL TO SAFE OPERATION. REPLACE THESE COMPONENTS WITH SONY PARTS WHOSE PART NUMBERS APPEAR AS SHOWN IN THIS MANUAL OR IN SUPPLEMENTS PUBLISHED BY SONY. CIRCUIT ADJUSTMENTS THAT ARE CRITICAL TO SAFE OPERATION ARE IDENTIFIED IN THIS MANUAL. FOLLOW THESE PROCEDURES WHENEVER CRITICAL COMPONENTS ARE REPLACED OR IMPROPER OPERATION IS SUSPECTED.

ATTENTION!!

AFIN D'EVITER TOUT RISQUE D'ELECTROCUTION PROVENANT D'UN CHÂSSIS SOUS TENSION, UN TRANSFORMATEUR D'ISOLEMENT DOIT ETRE UTILISÉ LORS DE TOUT DÉPANNAGE. LE CHÂSSIS DE CE RÉCEPTEUR EST DIRECTEMENT RACCORDÉ Á L'ALIMENTATION SECTEUR.

ATTENTION AUX COMPOSANTS RELATIFS Á LA SÉCURITÉ!!

LES COMPOSANTS IDENTIFIÉS PAR UNE TRAME ET PAR UNE MARQUE ⚠ SUR LES SCHÉMAS DE PRINCIPE, LES VUES EXPLOSÉES ET LES LISTES DE PIECES ÇONT D'UNE IMPORTANCE CRITIQUE POUR LA SÉCURITÉ DU FONCTIONNEMENT. NE LES REMPLACER QUE PAR DES COMPOSANTS SONY DONT LE NUMÉRO DE PIÉCE EST INDIQUÉ DANS LE PRÉSENT MANUEL OU DANS DES SUPPLÉMENTS PUBLIÉS PAR SONY. LES RÉGLAGES DE CIRCUIT DONT L'IMPORTANCE EST CRITIQUE POUR LA SÉCURITÉ DU FONCTIONNEMENT SONT IDENTIFIES DANS LE PRÉSENT MANUEL. SUIVRE CES PROCÉDURES LORS DE CHAQUE REMPLACEMENT DE COMPOSANTS CRITIQUES, OU LORSQU'UN MAUVAIS FONCTIONNEMENT EST SUSPECTÉ.

SAFETY CHECK-OUT
(US MODEL ONLY)

After correcting the original service problem, perform the following safety checks before releasing the set to the customer:

1. Check the area of your repair for unsoldered or poorly-soldered connections. Check the entire board surface for solder splashes and bridges.
2. Check the interboard wiring to ensure that no wires are "pinched" or contact high-wattage resistors.
3. Check that all control knobs, shields, covers, ground straps, and mounting hardware have been replaced. Be absolutely certain that you have replaced all the insulators.
4. Look for unauthorized replacement parts, particularly transistors, that were installed during a previous repair. Point them out to the customer and recommend their replacement.
5. Look for parts which, though functioning, show obvious signs of deterioration. Point them out to the customer and recommend their replacement.
6. Check the line cords for cracks and abrasion. Recommend the replacement of any such line cord to the customer.
7. Check the condition of the monopole antenna (if any). Make sure the end is not broken off, and has the plastic cap on it. Point out the danger of impalement on a broken antenna to the customer, and recommend the antenna's replacement.
8. Check the B+ and HV to see if they are specified values. Make sure your instruments are accurate; be suspicious of your HV meter if sets always have low HV.
9. Check the antenna terminals, metal trim, "metallized" knobs, screws, and all other exposed metal parts for AC Leakage. Check leakage as described below.

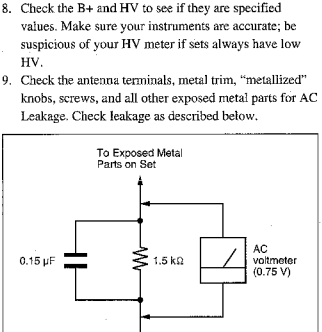

Fig. A. Using an AC voltmeter to check AC leakage.

LEAKAGE TEST

The AC leakage from any exposed metal part to earth ground and from all exposed metal parts to any exposed metal part having a return to chassis, must not exceed 0.5 mA (500 microampers).
Leakage current can be measured by any one of three methods.

1. A commercial leakage tester, such as the Simpson 229 or RCA WT-540A. Follow the manufacturers' instructions to use these instruments.
2. A battery-operated AC milliammeter. The Data Precision 245 digital multimeter is suitable for this job.
3. Measuring the voltage drop across a resistor by means of a VOM or battery-operated AC voltmeter. The "limit" indication is 0.75 V, so analog meters must have an accurate low-voltage scale. The Simpson 250 and Sanwa SH-63Trd are examples of a passive VOM that are suitable. Nearly all battery operated digital multimeters that have a 2 V AC range are suitable. (See Fig. A)

HOW TO FIND A GOOD EARTH GROUND

A cold-water pipe is guaranteed earth ground; the cover-plate retaining screw on most AC outlet boxes is also at earth ground. If the retaining screw is to be used as your earth-ground, verify that it is at ground by measuring the resistance between it and a cold-water pipe is not accessible, connect a 60 - 100 wattstrouble light (not a neon lamp) between the hot side of the receptacle and the retaining screw. Try both sltos, if necessafy, to locate the hot side of the line, the lamp should light at normal brilliance if the screw is at ground potentioal. (See Fig. B)

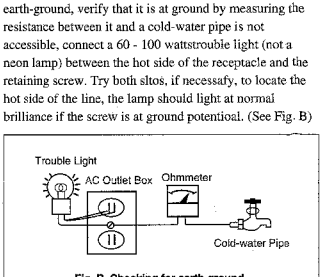

Fig. B. Checking for earth ground.

TABLE OF CONTENTS

1. OPERATING INSTRUCTIONS

1-1. PFM-500A1WU/500A1WE
OPERATING INSTRUCTIONS 1-1
1-2. MB-514
OPERATING INSTRUCTIONS 1-18
INSTALLATION MANUAL 1-20

2. SERVICE INFORMATION

2-1. Circuit Boards Location 2-1
2-2. Disassembly 2-2
2-2-1. I/O and Power Blocks Removal and Extension Cable Connection 2-2
2-2-2. H1 and UJ Boards Removal 2-2
2-2-3. AF, G2, UA and PDP Power Boards Removal 2-2
2-2-4. G1, H5 and B Board Removal 2-3
2-2-5. K Board Removal 2-3
2-2-6. Bezel Assy and H6 Board Removal 2-3
2-2-7. Plasma Display Panel and S1 Board Removal 2-4
2-2-8. Fan Cover Removal 2-4

3. ELECTRIC ADJUSTMENT IN THE SERVICE MODE

3-1. Electric adjustment in the service mode 3-1
3-2. Adjustment of respective signal levels 3-4
3-2-1. RGB level adjustment 3-4
3-2-2. YUV level adjustment 3-4
3-2-3. Y/C level adjustment 3-8
3-2-4. Adjustment of composite video level 3-9
3-2-5. SUB BRIGHT adjustment 3-10
3-2-6. White Balance adjustment 3-10

4. TROUBLE SHOOTING 4-1

5. SEMICONDUCTORS 5-1

6. EXPLODED VIEWS

PFM-500A1WU/500A1WE
6-1. Power block 6-2
6-2. SC and I/O blocks 6-4
6-3. Cabinet block 6-5
6-4. Packing materials 6-6
MB-514
6-5. MB-514 6-7

7. ELECTRICAL PARTS LIST 7-1

8. BLOCK DIAGRAM 8-1

9. DIAGRAMS

9-1. Frame Schematic Diagram 9-1
9-2. Schematic Diagrams and
Printed Wiring Boards 9-3
• H6 Board 9-3
• H5 Board 9-4
• UJ Board 9-5
• H1 Board 9-6
• H2 Board 9-7
• B (1/9) Board 9-9
• B (2/9) Board 9-10
• B (3/9) Board 9-11
• B (4/9) Board 9-12
• B (5/9) Board 9-13
• B (6/9) Board 9-14
• B (7/9) Board 9-15
• B (8/9) Board 9-16
• B (9/9) Board 9-17
• AI, B1, S1 Boards 9-18
• G1, G2 Boards 9-19
• K Board 9-20
• AF, UA Boards 9-21
• G (1/6) Board 9-22
• G (2/6) Board 9-23
• G (3/6) Board 9-24
• G (4/6) Board 9-25
• G (5/6), (6/6) Boards 9-26

SECTION 1
OPERATING INSTRUCTIONS

This section is extracted from operation manual.

1-1. PFM-500A1WU/500A1WE OPERATING INSTRUCTIONS

3-864-300-01(1)

Flat Panel Monitor

Operating Instructions	EN
Mode d'emploi	F
Bedienungsanleitung	D
Manual de Instrucciones	ES
Istruzioni per l'uso	I

PFM-500A1WU
PFM-500A1WE

© 1998

WARNING

Owner's Record

The model and serial numbers are located on the rear. Record the model and serial numbers in the spaces provided below. Refer to these numbers whenever you call upon your Sony dealer regarding this product.

Model No.____ Serial No.____

To prevent fire or shock hazard, do not expose the unit to rain or moisture.

For the customers in the U.S.A.

This equipment has been tested and found to comply with the limits for a Class A digital device, pursuant to Part 15 of the FCC Rules. These limits are designed to provide reasonable protection against harmful interference when the equipment is operated in a commercial environment. This equipment generates, uses, and can radiate radio frequency energy and, if not installed and used in accordance with the instruction manual, may cause harmful interference to radio communications. Operation of this equipment in a residential area is likely to cause harmful interference in which case the user will be required to correct the interference at his own expense.

You are cautioned that any changes or modifications not expressly approved in this manual could void your authority to operate this equipment.

For the customers in Canada

This class A digital apparatus complies with Canadian ICES-003.

For the customers in Europe

This is a Class A product. In a domestic environment, this product may cause radio interference in which case the user may be required to take adequate measures.

For PFM-500A1WE users

THIS APPARATUS MUST BE EARTHED

IMPORTANT

The wires in this mains lead are coloured in accordance with the following code:

Green-and-yellow	**: Earth**
Blue	**: Neutral**
Brown	**: Live**

As the colours of the wires in the mains lead of this apparatus may not correspond with the coloured markings identifying the terminals in your plug proceed as follows:

The wire which is coloured green-and-yellow must be connected to the terminal in the plug which is marked with the letter E or by the safety earth symbol ⏚ or coloured green or green-and-yellow.

The wire which is coloured blue must be connected to the terminal which is marked with the letter N or coloured black.

The wire which is coloured brown must be connected to the terminal which is marked with the letter L or coloured red.

Voor de klanten in Nederland

Bij dit produkt zijn batterijen geleverd. Wanneer deze leeg zijn, moet u ze niet weggooien maar inleveren als KCA.

The socket-outlet should be installed near the equipment and be easily accessible.

Note

When you connect a computer to this monitor, attach the supplied ferrite cores. If you do not do this, this monitor will not conform to mandatory FCC/ICES (EN55022) standards.

Attaching the ferrite cores

Set the ferrite cores on the both ends of the AC power cord. Close the lid tightly until the clamps click.

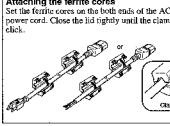

Table of Contents

Precautions 4
Features 5
Location and Function of Parts and Controls 6
- Front / Sides 6
- Control Panel 8
- Right Connector Panel 9
- Left Connector Panel 11
- Remote Commander RM-921 12

Installation 14
- Using the Retractable Feet 14

Connections 15
- Connecting the AC Power Cord 15
- Connection Example 16

Using On-screen Menus 17
- Operating Through Menus 17
- Menu Guide 17

Watching the Picture 21
- Switching the Picture 21
- Watching a Still Picture 21
- Input Signal and Monitor Status Information Display ... 21

Adjusting the Picture 23
- Adjusting the Contrast, Brightness, Chroma, and Phase 23
- Emphasizing the Contrast of the Picture (Picture AGC Function) 23
- Restoring the PIC CONTROL Menu Items to Original Settings 24

Zooming, Resizing, and Positioning the Picture 25
- Resizing the Picture 25
- Adjusting the Picture Position 25
- Zooming Up the Picture 26
- Restoring the Original Picture Size and Position 26

Using the Memory 27
- Storing the Current Condition 27
- Calling Up the Stored Condition 27

Turning Off the Power Automatically When There is No Input Signal (Power Saving Function) 29
Selecting the On-screen Language 30
Self-diagnosis Function 30
Operating a Specific Monitor With the Remote Commander 31
Using the Other Remote Commander 32
Specifications 33

Precautions

On safety

- Operate the unit on 100 to 120 V AC or 220 to 240 V AC.
- The nameplate indicating operating voltage, power consumption, etc. is located on the rear.
- Should any solid object or liquid fall into the cabinet, unplug the unit and have it checked by qualified personnel before operating it any further.
- Unplug the unit from the wall outlet if it is not to be used for several days or more.
- To disconnect the AC power cord, pull it out by grasping the plug. Never pull the cord itself.
- When the unit is installed on the floor, be sure to use the retractable feet.

On installation

- Allow adequate air circulation to prevent internal heat build-up. Do not place the unit on surfaces (rugs, blankets, etc.) or near materials (curtains, draperies) that may block the ventilation holes.
- Do not install the unit in a location near heat sources such as radiators or air ducts, or in a place subject to direct sunlight, excessive dust, mechanical vibration or shock.
- When you install multiple equipment with the unit, the following, such as Remote Commander's malfunction, noisy picture, noisy sound, may occur depending on the position of the unit and other equipment.

On PDP (Plasma Display Panel)

- There may be some tiny black points and/or bright points on the PDP. These points are normal.
- Do not display a same still image on the screen for long, consecutive time. Otherwise, the afterimage may appear on a part of a panel since the brightness of the part of the picture becomes high due to the consecutive display of the picture. Use the screen saver eventually to equalize the screen display.

On cleaning

To keep the unit looking brand-new, periodically clean it with a mild detergent solution. Never use strong solvents such as thinner or benzine, or abrasive cleansers since these will damage the cabinet. As a safety precaution, unplug the unit before cleaning it.

On repacking

Do not throw away the carton and packing materials. They make an ideal container in which to transport the unit. When shipping the unit to another location, repack it as illustrated on the carton.

If you have any questions about this unit, contact your authorized Sony dealer.

Features

The PFM-500A1WU is 16:9 42-inch flat panel monitor adopting the PDP (Plasma Display Panel) and accepts various types of signals with the built-in scan converter.

Scan converter

The unit is capable of converting the various signal, such as RGB, component, composite, or Y/C signal, to 480 line format.
The unit can convert a low-rate input signal into a high-rate one and perform flexible adjustments of the images, such as zoom and still.

ID control

You can operate a specific monitor among several monitors by using the index number features.

On-screen menus

You can adjust the settings by using the on-screen menus.

Control S

The control S signal allows remote control of several monitors and a VCR through a single monitor.

Other features

- Three dimensional comb filter for NTSC Y/C separation.
- Line correlation comb filter for PAL Y/C separation.
- Up to x4 zooming.
- Accepts infrared or wired Sony Remote Commanders using SIRCS code.
- Three sets of video inputs with audio inputs: one composite video or Y/C inputs, one RGB input, and one RGB/component input.
- Displays the HDTV signal with tri-level sync signal.
- Memory function for storage of up to five picture settings.
- Automatic input signal detection with indication.
- Windows95[1] PnP (Plug and Play) compatible.
- On-screen display in five languages for user-friendly access.
- Power Saving function.
- Self-diagnosis function.
- Picture AGC function — this function automatically adjusts and improves the contrast when a low intensity signal is input.

Warning on power connection

Use a proper power cord for your local power supply.

	United States Canada	Continental Europe	United Kingdom, Ireland, Australia, New Zealand	Japan
Plug type	VM0223	COX-07 [3]35	—	VM1296
Female end	VM0089	COX-02 [1]VM0310B	VM0310B	VM1059
Cord type	SJT	H05VV-F	CEE (13) 53rd (O.C)	HVCTF
Minimum cord set rating	10A/125V	10A/250V	10A/250V	13A/125V
Safety approval	UL/CSA	VDE	VDE	DENTORI

1) Windows95 is a registered trademark of the Microsoft Corporation.

Location and Function of Parts and Controls

Front / Sides

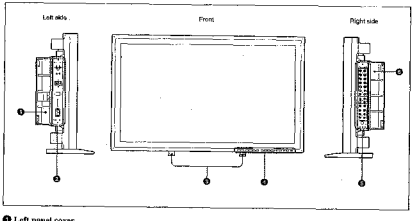

1 Left panel cover
Open it when using the left connector panel.
You can install the Remote Commander in the back of this cover.
For details on opening the panel cover, see the right on this page.

2 Left connector panel
For details on the left connector panel, see "Left Connector Panel" on page 11(EN).

3 Retractable feet
Use for setting the monitor on the floor.
For details on using the retractable feet, see "Using the Retractable Feet" on page 14(EN).

4 Control panel
For details on the control panel, see "Control Panel" on page 8(EN).

5 Right connector panel
For details on the right connector panel, see "Right Connector Panel" on page 9(EN).

6 Right panel cover
Open it when using the right connector panel.
For details on opening the panel cover, see the right on this page.

To open the panel cover

Loosen the screws counterclockwise and open the cover.

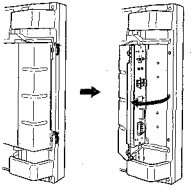

To take off the panel cover

Loosen the screws as illustrated below and take off the panel cover.

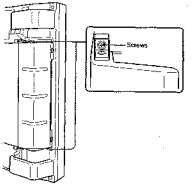

To install the Remote Commander in the panel cover

Install the Remote Commander in the back of the left panel cover as illustrated below.

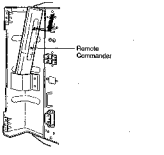

Note

When housing the Remote Commander, make sure that the top of the Remote Commander faces upward and rear faces outside.

PFM-500A1WU/PFM-500A1WE

Location and Function of Parts and Controls

Control Panel

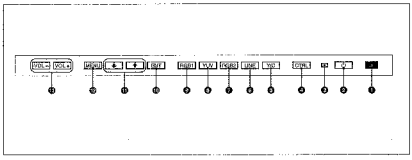

❶ Remote control detector
Receives the beam from the Remote Commander.

❷ ⏻ (standby) switch/⏻ (standby) indicator
Press to turn the monitor on. Press again to go back to the standby mode.
The ⏻ (standby) indicator lights up in red in the standby mode.
When the ⏻ indicator flashes, see "Self-diagnosis Function" on page 30(EN).

❸ Power indicator
Lights up when the monitor is turned on.
Flashes in the power saving mode.
For details on the power saving mode, see "Turning Off the Power Automatically When There Is No Input Signal (Power Saving Function)" on page 29(EN).

❹ CTRL (control) button
To operate the buttons on the control panel, first press this button. Then the buttons light up or flash that show they can be operated. Press again to deactivate them.

Note

The buttons (except for ⏻ (standby) switch ❷) on the control panel do not function if you do not press the CTRL button first.

❺ Y/C button
Select the signal input from the Y/C IN jack in the LINE connectors.

❻ LINE button
Select the signal input from the VIDEO IN connector in the LINE connectors.

❼ RGB2 button
Select the signal input from the RGB2 connectors.

❽ YUV button
Selects the component signal input from the RGB1 connectors.

❾ RGB1 button
Select the RGB signal input from the RGB1 connectors.

❿ ENT (enter) button
Press to select the desired item in a menu.

⓫ ↑/↓ buttons
Press to move the cursor (▶) to an item or to adjust value in a menu.

⓬ MENU button
Press to make the menu appear.

⓭ VOL (volume) +/– buttons
Press the + button to increase the volume, or the – button to decrease the volume.

Right Connector Panel

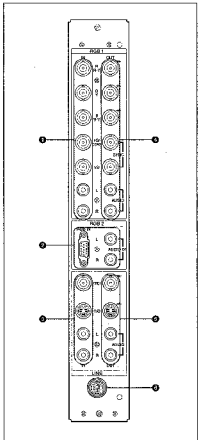

❶ RGB1 IN connectors
R (R-Y/G (Y)/B (B-Y) IN (BNC-type): Input the analog RGB signal or component signal. Connect to the RGB signal or component (Y/B-Y/R-Y) signal output of a computer or video equipment. This unit also accepts the HD analog component (Y/Pb/Pr) signal. Input the Pb signal to the B (B-Y) IN connector and Pr signal to the R (R-Y) IN connector.
HD/COMP IN (BNC-type): Input the H sync signal or composite sync signal. Connect to the H sync signal or composite sync signal output of a computer or video equipment.
VD IN (BNC-type): Input the V sync signal. Connect to the V sync signal output of a computer or video equipment.

External sync signal is selected automatically. See the priority chart below.

Input connector	Input sync signals		
HD/COMP IN	H Sync	Comp Sync	—
VD IN	V Sync	—	—
G(Y) IN	Sync on G	Sync on G	Sync on G
Sync signals to be selected	H Sync	Comp Sync	Sync on G
	V Sync		

AUDIO IN (L/R) (phono type): Input the audio signal. Connect to the audio output of a computer or video equipment. Connect to the channel L when the audio signal is monaural.

❷ RGB2 IN connectors
RGB IN (D-sub 15-pin): Connect to the RGB signal output of a computer.
AUDIO IN (L/R) (phono type): Input the audio signal. Connect to the audio output of a computer. Connect to the channel L when the audio signal is monaural.

(Continued)

Location and Function of Parts and Controls

❸ LINE IN connectors

VIDEO IN (BNC-type): Connect to the composite video signal output of the video equipment.

Y/C IN (Mini DIN 4-pin): Connect to the Y/C signal output of the video equipment.

AUDIO IN (L/R) (phone type): Connect to the audio output of the video equipment. Connect to the channel L when the audio signal is monaural.

❹ RGB1 OUT connectors

These connectors are used as loop-through outputs of the RGB1 IN connectors ❸.

When the plug is connected to the RGB OUT connectors, the 75-ohms termination of the RGB IN connectors is released, and the signal input to the RGB IN connectors is output from the these connectors.

R (R-Y)/G (Y)/B (B-Y) OUT (BNC-type): Loop-through outputs of the RGB IN connectors. Connect to the RGB signal or component (Y/B-Y/R-Y) signal input of another monitor.

HD/COMP OUT (BNC-type): Loop-through output of the HD/COMP IN connector. Connect to the H sync signal or composite sync signal input of another monitor.

VD OUT (BNC-type): Loop-through output of the VD IN connector. Connect to the V sync signal input of another monitor.

Note

The HD/COMP OUT and VD OUT connectors are high impedance outputs.

When using these outputs, connect a monitor with high impedance sync input connector, or the picture might be oscillated or disappeared because of the sync signal level mismatch.

AUDIO OUT (L/R) (phone type): Loop-through outputs of the AUDIO IN jacks. Connect to the audio inputs of another monitor.

❺ LINE OUT connectors

These connectors are used as loop-through outputs of the LINE IN connectors ❸.

When the plug is connected to the VIDEO OUT connector or Y/C OUT jack, the 75-ohms termination of the VIDEO IN connector or Y/C IN jack is released, and the signal input to the VIDEO IN or Y/C IN jack is output from the VIDEO OUT connector or Y/C OUT jack.

VIDEO OUT (BNC-type): Connect to the composite video signal input of another monitor or video equipment.

Y/C OUT (Mini DIN 4-pin): Connect to the Y/C signal input of another monitor or video equipment.

AUDIO OUT (L/R) (phone type): Loop-through outputs of the AUDIO IN jacks. Connect to the audio inputs of another monitor or video equipment.

❻ Service connector (mini DIN 8-pin)

This connector is only for qualified personnel.

Left Connector Panel

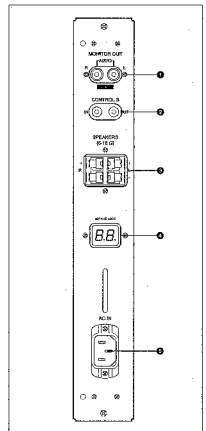

❶ MONITOR OUT AUDIO (L/R) jacks (phone type)

Output the signal input from the AUDIO IN jacks.

Connect to the audio inputs of an audio amplifier (not supplied).

Note

These jacks are variable outputs. Set the volume to maximum position to set the output level to 500 mVrms.

❷ CONTROL S IN/OUT jacks (mini jacks)

Connect to the CONTROL S jacks of video equipment or another monitors. Then you can simultaneously control all equipment with a single Remote Commander.

To control equipment by aiming the supplied Remote Commander to the remote control detector of the monitor, connect the CONTROL S OUT jack of the monitor and the CONTROL S IN jack of other equipment.

Notes

- If you connect the CONTROL S IN jack to the other equipment's CONTROL S OUT jack, you cannot operate the monitor with the Remote Commander.
- You can use the stereo cable with mini plug instead of the control S cable.

❸ SPEAKERS L/R terminals

Connect to speakers with 6 to 16 ohms impedance.

Note

Do not connect the speaker's cord to the monitor and to an amplifier simultaneously, or an excessive electric current might flow from the amplifier and damage the monitor.

❹ SERVICE CODE indicator

This indicator is only for qualified personnel.

❺ ∿AC IN socket

Connect the supplied AC power cord to this socket and to a wall outlet. Once you connect the AC power cord, the monitor turns to standby mode.

Location and Function of Parts and Controls

Remote Commander RM-923

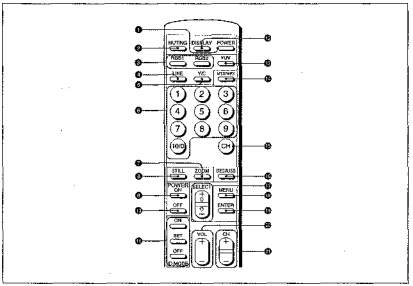

❶ POWER switch
Press to turn on the monitor. Press again to go back to the standby mode.

Note

When using multiple monitors, press this switch to turn monitors which are already on into the standby mode, or turn on monitors which are in the standby mode.

❷ MUTING button
Press to mute the sound. Press this button again or press the VOL (volume) +/– button to obtain the sound again.

❸ RGB1/RGB2 buttons
Select the signal input from the RGB1 or RGB2 connectors.

❹ LINE button
Selects the signal input from the VIDEO IN connector in the LINE connectors.

❺ Y/C button
Selects the signal input from the Y/C IN jack in the LINE connectors.

❻ Number buttons
Press to select the index number.

❼ ZOOM button
Adjusts the zoom. Each time you press the ZOOM button, the picture is magnified by two, three, and four times respectively.

❽ STILL button
Freezes a picture on the monitor screen. Press again to resume normal screen.

❾ POWER ON switch
Press to turn on the monitor. When you use multiple monitors, you can use this switch instead of the POWER switch ❶ not to affect another monitor which is already turned on.

❿ POWER OFF switch
Press to turn the monitor into the standby mode. When you use multiple monitors, you can use this switch instead of the POWER switch ❶ not to affect another monitor which are in the standby mode.

⓫ ID MODE (ON/SET/OFF) buttons
Press the ON button to make an index number appear on the screen. Then press the index number of the monitor you want to operate and press the SET button. After you finish the operation, press the OFF button to return to the normal mode.

⓬ DISPLAY button
Displays the input signal information on the top of the monitor screen. Press again to clear it.

⓭ YUV button
Selects the component signal input from the RGB1 connectors.

⓮ MTS/MPX button
This button does not operate with the monitor.

⓯ CH button
This button does not operate with the monitor.

⓰ DEGAUSS button
This button does not operate with the monitor.

⓱ SELECT +/–/↑/↓ buttons
Press to move the cursor (▶) to an item or to adjust value in a menu.

⓲ MENU button
Press to make the menu appear.

⓳ ENTER button
Press to select the desired item in a menu.

⓴ VOL +/– buttons
Press the + button to increase the volume, or the – button to decrease the volume.

㉑ CH +/– buttons
This button does not operate with the monitor.

Installing batteries

Insert two size AA (R6) batteries in correct polarity.

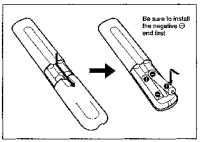

- In normal operation, batteries will last up to half a year. If the Remote Commander does not operate properly, the batteries might be exhausted. Replace them with new ones.
- To avoid damage from possible battery leakage, remove the batteries if you do not plan to use the Remote Commander for a fairly long time.

When the Remote Commander does not work

Check that the ⏻ indicator lights up. The Remote Commander operates the monitor only when the monitor is turned on, or it is in the standby mode.

Note

If you connect the cable to the CONTROL S IN jack on the side of the monitor, you cannot operate the monitor with the Remote Commander.

Installation

Using the Retractable Feet

1 Pull out the knobs and pull down the retractable feet.

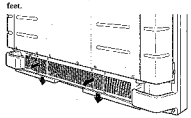

2 Turn the retractable feet outward.

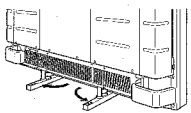

3 Push in the retractable feet and lock.

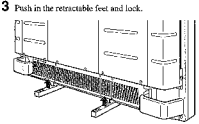

To fix the retractable feet

When the unit is installed on the floor, be sure to fix the retractable feet.
Install the retractable feet stabilizers as illustrated below.

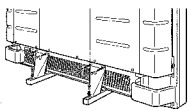

Connections

Connecting the AC Power Cord

1 Plug the power cord into the AC IN socket. Then, attach the AC plug holder (supplied) to the AC power cord.

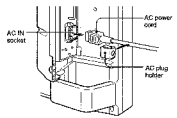

2 Slide the AC plug holder over the cord until it connects to the AC IN socket cover.

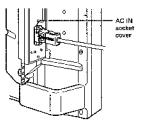

To remove the AC power cord
Squeeze the upper and lower sides and pull out the AC plug holder.

PFM-500A1WJ/PFM-500A1WE

Connections

Connection Example

Before you get started

- First make sure that the power to each piece of equipment is turned off.
- Use connecting cables suitable for the equipment to be connected.
- The cable connectors should be fully inserted into the jacks. A loose connection may cause hum and other noise.
- To disconnect the cable, pull out by grasping the plug. Never pull the cable itself.
- Read the instruction manual of the equipment to be connected.

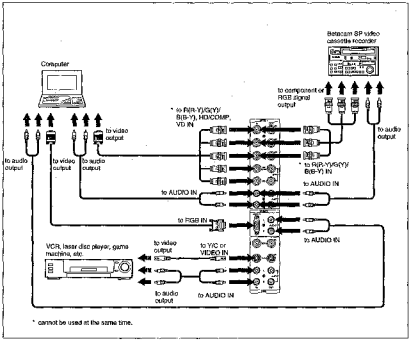

Using On-screen Menus

Operating Through Menus

Menu operating buttons

There are four buttons on the monitor and the Remote Commander for menu operations.

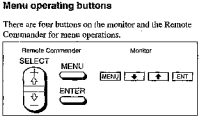

The buttons on the control panel are used for explanation purpose in this operating instructions. The ENTER button on the Remote Commander has the same function as the ENT button on the control panel and the SELECT ↑/↓ buttons on the Remote Commander as same as the ↑/↓ buttons on the control panel.

Configuration of the menu

To select the language used in the menu, see page 30(EN).

1 Press MENU.
The main menu appears on the monitor screen.

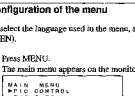

2 Press ↑/↓ to move the cursor (▶) and press ENT to select a menu.
The selected menu appears on the monitor screen.

3 Press ↑/↓ to move the cursor (▶) and press ENT to select an item.
The menu for the selected item appears on the monitor screen.

4 Press ↑/↓ to adjust or select the setting and press ENT to set.
The setting is registered and the menu returns to the previous menu.

To return to the normal screen, press the MENU button repeatedly until the menu disappears.

Menu Guide

Note

"– – –" appears next to an item when its function is not available. The availability depends on the types of input signal.

PIC CONTROL menu

This menu is used for adjusting the picture.

1 CONTRAST
Press ↑ to increase the contrast and press ↓ to decrease it.

2 BRIGHTNESS
Press ↑ to make the picture brighter and press ↓ to make it darker.

3 CHROMA
Press ↑ to increase color saturation and press ↓ to decrease it.

4 PHASE
Press ↑ to make overall picture greenish and press ↓ to make it purplish.

5 COLOR TEMP
Select the color temperature from HIGH (6500K) or LOW (about 5500K).

6 PICTURE AGC
Select ON to improve the contrast automatically when a low intensity signal is input.
For details on the picture AGC function, see "Emphasizing the Contrast of the Picture (Picture AGC Function)" on page 28(EN).

7 RESET
Select to restore the factory settings in the PIC CONTROL menu items 1 to 6.
For details on using the reset function, see "Restoring the PIC CONTROL Menu Items to Original Settings" on page 24(EN).

Using On-screen Menus

PIC SIZE menu

This menu is used for zooming, positioning, and resizing the picture.

8 H SIZE
Adjusts the horizontal picture size. Press ↑ to enlarge the horizontal size and press ↓ to diminish it.

9 H SHIFT
Adjusts the horizontal centering. Press ↑ to move the picture to the right and press ↓ to move it to the left.

10 V SIZE
Adjusts the vertical picture size. Press ↑ to enlarge the vertical size and press ↓ to diminish it.

11 V SHIFT
Adjusts the vertical centering. Press ↑ to move the picture up and press ↓ to move it down.

12 ZOOM
Zooms up the picture two, three, and four times.

13 ASPECT
Set the aspect ratio of the picture to 4:3 or 16:9.

14 RESET
Select to restore the factory settings in the PIC SIZE menu items 8 to 13.
For details on using the reset function, see "Restoring the Original Picture Size and Position" on page 26(EN).

CONFIG menu

This menu is used for adjusting the signal or selecting the language.

15 V ENHANCE
Select ON normally.
Select ON to sharpen the vertical edge.

16 H FILTER
Select AUTO normally.
Select HIGH when the ringing appears on the screen.
Select LOW when the moiré pattern or noise appears on the screen. The moiré pattern or noise decreases even the screen looks a little blurred.

17 DISPLAY
Select ON to display the input signal information for about five seconds on the top of the monitor screen when turning on the power or switching the input signal.

18 POWER SAVE
Set the time period to activate the power saving mode.
For details on the power saving function, see "Turning Off the Power Automatically When There Is No Input Signal (Power Saving Function)" on page 29(EN).

19 LANGUAGE
Select the on-screen language among five languages.
Available languages are: English, German, French, Italian and Spanish.
For details on selecting the language, see "Selecting the On-screen Language" on page 30(EN).

MEMORY menu

This menu is used for saving or recalling the settings in the PIC CONTROL, PIC SIZE and CONFIG (only for V ENHANCE and H FILTER) menus.

For details, see "Using the Memory" on page 27(EN).

20 LOAD
Recalls the preset settings.

21 SAVE
Saves the settings.

REMOTE menu

This menu is used for the remote control setting.

22 INDEX NO.
Sets the index number of the monitor.

Note
When you set the number, use the buttons on the monitor.
For details on the index number, see "Operating a Specific Monitor With the Remote Commander" on page 31(EN).

23 REMOTE MODE
Select the Remote Commander mode.
TV: Sony monitors' or TVs' commander
PJ: Sony projectors' commander
OFF: Disables the remote control.
For details, see "Using the Other Remote Commander" on page 32(EN).

24 REMOTE ONLY
Select ON to disable the front control buttons on the monitor. The monitor can only be controlled with the Remote Commander. While REMOTE ONLY is ON, the indicators on the front panel go off.
To cancel the REMOTE ONLY mode, set REMOTE ONLY to OFF with the Remote Commander, or press the CTRL button while pressing the ⏻ switch. The monitor turns to the standby mode and the REMOTE ONLY mode is canceled.
The setting in this item is still retained when the AC power cord is disconnected.

Using On-screen Menus

STATUS menu

This menu is used for displaying the internal condition of the monitor.

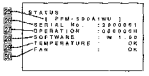

25 Model name
Indicates the model name.

26 SERIAL No.
Indicates the serial number.

27 OPERATION
Indicates the total operation hours.

Note
The standby mode is not counted as OPERATION time.

28 SOFTWARE
Indicates the system software version.

29 TEMPERATURE
Indicates whether the internal temperature of the monitor is usual.
OK: Usual
NG: Unusual
When the internal temperature is unusual, NG is displayed and the item flashes in red. The ⏻ indicator on the control panel also flashes.

Note
The "TEMPERATURE NG" message may appear when the ventilation holes are blocked or the monitor is installed in a poorly ventilated area. In this case, check that the ventilation holes are not blocked and install the monitor in a good ventilated area. If the message still displayed, contact your authorized Sony dealer.
When the ⏻ indicator flashes or NG indicates, see "Self-diagnosis Function" on page 30(EN).

30 FAN
The cooling fans are built in this monitor. This item indicates whether the cooling fans work properly.
OK: Usual
NG: Unusual
When the cooling fans are unusual, NG is displayed and the item flashes in red. The ⏻ indicator on the control panel also flashes.

Note
When the "FAN NG" message appears, contact your authorized Sony dealer.
When the ⏻ indicator flashes or NG indicates, see "Self-diagnosis Function" on page 30(EN).

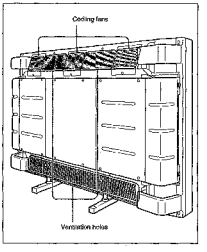

Watching the Picture

Before you start
- Turn on the monitor.
- Turn on the connected equipment and play a video source.
- To display the input signal information on the screen when turning on the power or switching the input signal, set "DISPLAY" in the CONFIG menu to ON.
- To select the on-screen language used in the menu, see page 30(EN).

Switching the Picture

1 Press CTRL on the control panel of the monitor. RGB1, YUV, RGB2, LINE, and Y/C buttons light up.

2 Select the input source to be displayed by pressing the following buttons.
RGB1: Selects the audio and video signal input from the RGB1 connectors when the input signal is RGB signal.
YUV: Selects the audio and video signal input from the RGB1 connectors when the input signal is component signal.
RGB2: Selects the audio and video signal input from the RGB2 connectors.
LINE: Selects the audio and video signal input from the VIDEO IN connector and AUDIO IN jack in the LINE connectors.
Y/C: Selects the audio and video signal input from the Y/C IN connector and AUDIO IN jack in the LINE connectors.

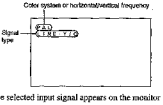

The selected input signal appears on the monitor screen.

You can also switch the input signal from the Remote Commander.

Note
We recommend the input source video equipment equipped with the TBC (time base corrector). If you receive the signal without the TBC, the picture may disappear due to disturbance of the sync signal.

Watching a Still Picture

You can freeze the picture with the STILL button on the Remote Commander. To freeze the picture, press the STILL button when the motion picture is displayed.
You can also freeze the picture by simply pressing the ↑ button on the control panel.

To resume the normal screen
- Press the STILL button on the Remote Commander or ↑ button on the control panel again.
- Switch the input signal.

Notes
- When operating the menu, the ↑ button functions as for the menu operation.
- The ↑/↓ buttons flash while in the still mode.
- When you set DISPLAY to ON in the CONFIG menu, the "STILL" display appears on the top of the monitor. To clear the display, set DISPLAY to OFF.

Input Signal and Monitor Status Information Display

Input signal and monitor status information is displayed on-screen for about five seconds when turning on the power or switching the input signal. To disable this function, follow the steps below.

1 Press MENU.
The main menu appears on the monitor screen.

(Continued)

Watching the Picture

2 Press ↑/↓ to move the cursor (▶) to "CONFIG" and press ENT.
The CONFIG menu appears on the monitor screen.

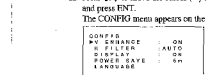

3 Press ↑/↓ to move the cursor (▶) to "DISPLAY" and press ENT.
The following menu appears on the monitor screen.

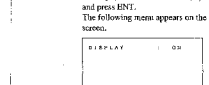

4 Press ↑ to set "DISPLAY" to OFF and press ENT.
The DISPLAY function is disabled.

To activate the information function, set "DISPLAY" to ON at the step 4 above.

Note

You can display the input signal information anytime by pressing the DISPLAY button on the Remote Commander, regardless of the above setting.

The input signal information list

Color system or horizontal/vertical frequency

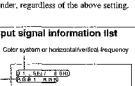

Input signal	Color system or horizontal/vertical frequency display
NTSC	NTSC
PAL	PAL
VGA[a] (Graphics)	31.5 kHz / 60 Hz
VGA (Text)	31.5 kHz / 70 Hz
HDTV	33.8 kHz / 60 Hz
Mac[b] 13"	35.0 kHz / 67 Hz
VESA[c] 800×600	37.9 kHz / 60 Hz
VESA 1024×768	48.4 kHz / 60 Hz
Mac 16"	49.7 kHz / 75 Hz
ATI[d] 1280×1024	64.0 kHz / 60 Hz
Mac 21"	68.7 kHz / 75 Hz
VESA 1280×1024	80.0 kHz / 75 Hz

a) VGA is a registered trademark of the International Business Machines Corporation, USA.
b) Mac (Macintosh) is a registered trademark of Apple Computer, Inc.
c) VESA is a registered trademark of Video Electronics Standard Association.
d) ATI is a registered trademark of ATI Technologies, Inc.

Note

When inputting the HDTV signal, input the tri-level sync signal to the G/Y IN connector.

Actual on-screen display of the monitor status

On-screen display	Significance
31.5kHz / 60Hz (eg.)	The selected input signal is computer RGB.
525 / 60 (eg.)	The selected input signal is RGB or component video.
NTSC	The selected input signal is NTSC.
PAL	The selected input signal is PAL.
OTHERS	The input signal is out of the capture range.
NO SYNC	There is no input signal.
MUTING	The sound is muted.
RGB1 RGB	The signal mode of RGB1 is set to RGB.
RGB1 YUV	The signal mode of RGB1 is set to component video.
LINE COMP	Composite video input is selected at LINE.
LINE Y/C	Y/C video input is selected at LINE.
STILL	The picture is frozen.

Adjusting the Picture

While watching the picture, you can adjust contrast, brightness, chroma, and phase to suit your taste. The adjustments can be carried out for each input signal separately. You can also store the adjusted levels in memory.

Adjusting the Contrast, Brightness, Chroma, and Phase

Press MENU so that the main menu appears on the monitor screen and select the "CONTRAST", "BRIGHTNESS", "CHROMA", or "PHASE" from the PIC CONTROL menu with the ↑/↓ buttons.

CONTRAST

Select the "CONTRAST" with the ↑/↓ buttons and press the ENT button.
Adjust the contrast with the ↑/↓ buttons in the range from MIN (0) to MAX (+100).
↑: to increase picture contrast
↓: to decrease picture contrast

BRIGHTNESS

Select the "BRIGHTNESS" with the ↑/↓ buttons and press the ENT button.
Adjust the brightness with the ↑/↓ buttons in the range from MIN (–50) to MAX (+50).
↑: to make overall picture greenish
↓: to make overall picture purplish

CHROMA

Select the "CHROMA" with the ↑/↓ buttons and press the ENT button.
Adjust the chroma with the ↑/↓ buttons in the range from MIN (–50) to MAX (+50).
↑: to increase color intensity
↓: to decrease color intensity

PHASE

Select the "PHASE" with the ↑/↓ buttons and press the ENT button.
Adjust the phase with the ↑/↓ buttons in the range from MIN (–50) to MAX (+50).
↑: to make overall picture greenish
↓: to make overall picture purplish

Notes

- CHROMA and PHASE controls do not function with RGB signal.
- PHASE control does not function with component signal.
- PHASE control does not function with PAL color source.
- Do not change the CHROMA/PHASE (NTSC only) level when the selected signal is not NTSC or PAL. Although it gives no effect to the current picture, it does affect the picture of the NTSC or PAL signal which is input later.

Emphasizing the Contrast of the Picture (Picture AGC Function)

When the intensity of the picture is low, this function works to improve the contrast automatically.
Turn on this function when the image source is dark.

1 Press MENU.
The main menu appears on the monitor screen.

2 Press ↑/↓ to move the cursor (▶) to "PIC CONTROL" and press ENT.
The PIC CONTROL menu appears on the monitor screen.

(Continued)

Adjusting the Picture

3 Press ↑/↓ to move the cursor (▶) to "PICTURE AGC" and press ENT.
The following menu appears on the monitor screen.

```
PICTURE AGC   :  OFF
```

4 Press ↑/↓ to set "PICTURE AGC" to ON.

5 Press ENT.
The menu returns to the PIC CONTROL menu.

Restoring the PIC CONTROL Menu Items to Original Settings

1 In the PIC CONTROL menu, Press ↑/↓ to move the cursor (▶) to "RESET" and press ENT.
The following menu appears on the monitor screen.

```
RESET:  NO

SELECT   CANCEL
```

2 Press ↑/↓.
"NO" changes to "YES."

```
RESET:  YES

SELECT   CANCEL
```

3 Press ENT.
The PIC CONTROL menu items are restored.

To cancel the reset function, press the MENU button before pressing the ENT button.

Zooming, Resizing, and Positioning the Picture

You can shift the position of the picture so that it fits in the screen, or adjust the vertical and horizontal size of the picture separately.
You can zoom up the picture making it two, three, or four times as large as the original size.

Resizing the Picture

1 Press MENU.
The main menu appears on the monitor screen.

```
MAIN  MENU
▶PIC CONTROL
 PIC SIZE
 CONFIG
 MEMORY
 REMOTE
 STATUS

SELECT   CANCEL
```

2 Press ↑/↓ to move the cursor (▶) to "PIC SIZE" and press ENT.
The PIC SIZE menu appears on the monitor screen.

```
PIC SIZE
▶H SIZE      :  00
 H SHIFT     :  00
 V SIZE      :  00
 V SHIFT     :  00
 ZOOM        :  x1
 ASPECT      :  4x3
 RESET
SELECT   CANCEL
```

3 Press ↑/↓ to move the cursor (▶) to "H SIZE" and press ENT.
The following menu appears on the monitor screen.

```
H SIZE       :  00
```

4 Press ↑/↓ to resize the picture.
↑: to expand horizontal size
↓: to reduce horizontal size
The horizontal picture size is indicated on the monitor screen in the range from MIN(–50) to MAX(+50). The factory value is 00.

5 Press ENT.
The menu returns to the PIC SIZE menu.

6 Press ↑/↓ to move the cursor (▶) to "V SIZE" and press ENT.
The following menu appears on the monitor screen.

```
V SIZE       :  00
```

7 Press ↑/↓ to resize the picture.
↑: to expand vertical size
↓: to reduce vertical size
The vertical picture size is indicated on the monitor screen from MIN(–50) to MAX(+50). The factory value is 00.

8 Press ENT.
The menu returns to the PIC SIZE menu.

Adjusting the Picture Position

1 In the PIC SIZE menu, press ↑/↓ to move the cursor (▶) to "H SHIFT" and press ENT.
The following menu appears on the monitor screen.

```
H SHIFT      :  00
```

2 Press ↑/↓ to shift the picture.
↑: to shift the picture to the right
↓: to shift the picture to the left
The horizontal picture position is indicated on the monitor screen from MIN(–50) to MAX(+50). The factory value is 00.

3 Press ENT.
The menu returns to the PIC SIZE menu.

(Continued)

Zooming, Resizing, and Positioning the Picture

4 Press ↑/↓ to move the cursor (▶) to "V SHIFT" and press ENT.
The following menu appears on the monitor screen.

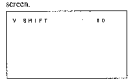

5 Press ↑/↓ to shift the picture.
↑: to shift the picture upward
↓: to shift the picture downward
The vertical picture position is indicated on the monitor screen from MIN(-50) to MAX(+50). The factory value is 00.

6 Press ENT.
The menu returns to the PIC SIZE menu.

Zooming Up the Picture

You can also operate with the ZOOM button on the Remote Commander.

1 In the PIC SIZE menu, press ↑/↓ to move the cursor (▶) to "ZOOM" and press ENT.
The following menu appears on the monitor screen.

2 Press ↑/↓ to set zoom.
Each time you press ↑, the picture is magnified by two, three, and four times respectively.
To zoom down, press ↓.

3 Press ENT.
The menu returns to the PIC SIZE menu.

Restoring the Original Picture Size and Position

1 In the PIC SIZE menu, press ↑/↓ to move the cursor (▶) to "RESET" and press ENT.
The following menu appears on the monitor screen.

2 Press ↑/↓.
"NO" changes to "YES."

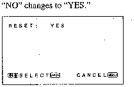

3 Press ENT.
The original picture size and position are restored.

To cancel the reset function, press the MENU button before pressing the ENT button.

Using the Memory

You can save the current picture condition by each input signal using MEMORY function.
The saved condition can be restored whenever necessary.
The items in PIC CONTROL, PIC SIZE and CONFIG (only for V ENHANCE and H FILTER) menus can be memorized.
You can save the picture condition of up to five input signals.

Storing the Current Condition

1 Press MENU.
The main menu appears on the monitor screen.

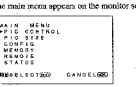

2 Press ↑/↓ to move the cursor (▶) to "MEMORY" and press ENT.
The MEMORY menu appears on the monitor screen.

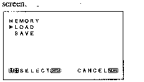

3 Press ↑/↓ to move the cursor (▶) to "SAVE" and press ENT.
The following menu appears on the monitor screen.

4 Press ↑/↓ to move the cursor (▶) to MEM 1 to 5 and press ENT.
"COMPLETED" message appears for about five seconds.
The current data is stored under the selected memory number.
If any data has been stored in the selected memory number, the signal type and the color system or horizontal frequency/vertical frequency are now displayed on the right column next to the selected memory number.

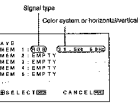

Calling Up the Stored Condition

1 In the MEMORY menu, press ↑/↓ to move the cursor (▶) to "LOAD" and press ENT.
The following menu appears on the monitor screen.

2 Press ↑/↓ to move the cursor (▶) to MEM 1 to 5 and press ENT.
"COMPLETED" message appears for about five seconds.
The picture is adjusted to the selected condition.

Using the Memory

Notes

- You cannot recall the memory data if the selected signal is different from the preset signal.
- The following items can be memorized:

PIC CONTROL menu
– CONTRAST
– BRIGHTNESS
– CHROMA
– PHASE
– COLOR TEMP
– PICTURE AGC

PIC SIZE menu
– H SIZE
– H SHIFT
– V SIZE
– V SHIFT
– ZOOM
– ASPECT

CONFIG menu
– V ENHANCE
– H FILTER

Turning Off the Power Automatically When There Is No Input Signal (Power Saving Function)

This unit automatically turns off the power after certain period if there is no input signal from the RGB1 or RGB2 connectors. (Power saving function)

1 Press MENU.
The main menu appears on the monitor screen.

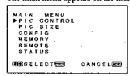

2 Press ↑/↓ to move the cursor (▶) to "CONFIG" and press ENT.
The CONFIG menu appears on the monitor screen.

3 Press ↑/↓ to move the cursor (▶) to "POWER SAVE" and press ENT.
The following menu appears on the monitor screen.

4 Press ↑/↓ to select the period to turn into the power saving mode.
OFF: The power saving function does not work.
5 m: Turn into the power saving mode after five minutes if there is no input signal.
10 m: Turn into the power saving mode after 10 minutes if there is no input signal.

The power indicator flashes when the unit is in the power saving mode.

To cancel the power saving function

- Input the sync signal again.
- Press the ⏻ switch on the control panel or the POWER switch on the Remote Commander.

Signal specification for using the power saving function

RGB1: When the sync signal is connected to the HD/COMP IN connector.
RGB2: When the sync signal is connected to the 13th pin of the RGB IN (D-sub 15-pin) connector.

Notes

- The power saving function does not work when the signal is input from the LINE connectors.
- If the sync signal is not connected to the HD/COMP IN connector, the unit does not turn on even if the sync signal is input. Be sure to set POWER SAVE to OFF when only the RGB signal or component signal is connected.
- If the sync signal is not connected to the 13th pin of the RGB IN (D-sub 15-pin) connector, the unit does not turn on even if the sync signal is input. Be sure to set POWER SAVE to OFF when only the RGB signal is connected.

Selecting the On-screen Language

You can select the on-screen language among five languages.
Available languages are: English, German, French, Italian and Spanish.

1 Press MENU.
The main menu appears on the monitor screen.

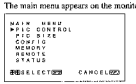

2 Press ↑/↓ to move the cursor (▶) to "CONFIG" and press ENT.
The CONFIG menu appears on the monitor screen.

3 Press ↑/↓ to move the cursor (▶) to "LANGUAGE" and press ENT.
The following menu appears on the monitor screen.

4 Press ↑/↓ to move the cursor (▶) to desired language and press ENT.
The on-screen language is switched to the one you selected.
ENGLISH: English
DEUTSCH: German
FRANÇAIS: French
ITALIANO: Italian
ESPAÑOL: Spanish

5 Press MENU.
The menu returns to the CONFIG menu.

Self-diagnosis Function

The unit has a self-diagnosis function.
This function displays the monitor's condition with the ⏻ indicator flashing and numbers on the SERVICE CODE indicator. The numbers inform you of the monitor's current condition.
When the unit is working properly, only the dot at the lower-right position on the SERVICE CODE indicator flashes.
If the ⏻ indicator flashes, check the number and contact your authorized Sony dealer.

1 Check the two-digit number on the SERVICE CODE indicator.
The indicator shows one number, or multiple numbers alternately every a half second.

2 Unplug the unit.
Inform the number to your authorized Sony dealer.

Operating a Specific Monitor With the Remote Commander

Using the supplied Remote Commander, you can operate a specific monitor without affecting other monitors that are installed together.

1 Press ID MODE ON on the Remote Commander.
Monitor index numbers appear in white characters on all the monitors. (Every monitor is allocated an individual preset index number from 1 to 255.)
See "To change the index number" in the column to the right on this page to change the index number.

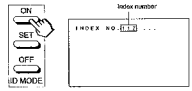

2 Input the index number of the monitor you want to operate using 0 – 9 buttons on the Remote Commander.
The input number appears right next to each monitor's own index number.

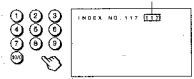

3 Press ID MODE SET.
The character on the selected monitor changes to cyan while others change to red.

You can operate only a specified monitor. (All operations are available in ID mode except POWER ON/OFF.)

4 After necessary adjustment, press ID MODE OFF.
The monitor returns to the normal mode.

To change the index number

You can change the index number if necessary.
When you change the number, use the buttons on the monitor.

1 Press MENU.
The main menu appears on the monitor screen.

2 Press ↑/↓ to move the cursor (▶) to "REMOTE" and press ENT.
The REMOTE menu appears on the monitor screen.

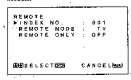

3 Press ↑/↓ to move the cursor (▶) to "INDEX NO." and press ENT.
The following menu appears on the monitor screen.

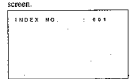

4 Select the index number with ↑/↓ and press ENT.
The menu returns to the REMOTE menu.

Using the Other Remote Commander

The following operations can be controlled.
- Power on/off
- Input selection
- Menu operations
- Picture adjustments: contrast, phase and chroma
- On-screen display on/off (only for video monitors and TVs)

The available operations and the buttons to be used for each operation are limited depending on each Remote Commander. See the table below.

Remote Commander model		RM-954	RM-1211	RM-PJ1292	RM-PJ1000
REMOTE MODE setting		TV	PJ	PJ	PJ
Input selection	RGB1	RGB	A	A	A
	RGB 2	—	B	B	B
	LINE	LINE1	VIDEO	VIDEO	VIDEO
Menu operation	MENU	MENU	PAGE or ←	PAGE or ←	MENU or ←
	ENTER	ENTER	→	→	ENTER or →
	+	+	↑	↑	↑
	–	–	↓	↓	↓
Picture adjustment	Contrast	CONTRAST+/–	CONTR+/–	CONTR+/–	CONTR+/–
	Chroma	CHROMA+/–	COLOR+/–	COLOR+/–	COLOR+/–
	Phase	PHASE+/–	HUE+/–	HUE+/–	HUE+/–
On-screen information		DISPLAY	—	STATUS ON	STATUS ON

Specifications

Video processing

Capture range	Horizontal rate: 15.6 to 80 kHz Vertical rate: 48 to 120 Hz
Preset signal	Input: 12 formats (See page 22(EN))
Video memory	1,152 × 1,152 × 24 bits (RGB total)
Sampling rate	12.5 to 40 MHz offset phase max. (equivalent to 80 MHz sampling)
Panel system	AC-type Plasma Display Panel
Display resolution	852 dots × 480 lines
Pixel pitch	1.08(horizontal) × 1.08(vertical) mm (7/16 × 7/16 inches)
Picture size	920 (horizontal) × 518 (vertical) mm (36 1/4 × 20 1/2 inches)
Panel size	42-inch (diagonal 1,056 mm)

Inputs and Outputs

RGB1

R (R-Y)/ G (Y)/B (B-Y) IN
BNC-type (×3)
0.714 Vp-p/non-composite 75-ohm (automatic termination)
1 Vp-p/composite 75-ohm (automatic termination)

SYNC IN(HD/COMP, VD)
BNC-type (×2)
H (or composite) SYNC, V SYNC, 1 to 5 Vp-p high impedance

AUDIO IN (L, R) Phono jack (×2)
500 mVrms, high impedance

R (R-Y)/ G (Y)/B (B-Y) OUT
BNC-type (×3) Loop-through

SYNC OUT (HD/COMP, VD)
BNC-type (×2) Loop-through
H (or composite) SYNC, V SYNC

AUDIO OUT (L, R)
Phono jack (×2) Loop-through

RGB2

RGB IN D-sub 15-pin
See "Pin assignment" on page 34(EN).

AUDIO IN (L, R) Phono jack (×2)
500 mVrms, high impedance

LINE (NTSC, PAL)

VIDEO IN BNC-type (×1)
Composite video, 1 Vp-p ±2 dB sync negative, 75-ohm (automatic termination)

Y/C IN Mini DIN 4-pin type (×1)
Y (luminance): 1 Vp-p ±2 dB sync negative, 75-ohm (automatic termination)
C (chrominance): Burst 0.286 Vp-p ±2 dB (NTSC), 75-ohm (automatic termination)
Burst 0.3 Vp-p ±2 dB (PAL) 75-ohm (automatic termination)

AUDIO IN (L, R) Phono jack (×2)
500 mVrms, high impedance

VIDEO OUT BNC-type (×1) Loop-through

Y/C OUT Mini DIN 4-pin type (×1) Loop-through

AUDIO OUT (L, R) (Variable output)
Phono jack (×2) Loop-through

MONITOR OUT AUDIO (L, R)
Phono jack (×2)
Maximum 500 mVrms, high impedance

CONTROL S (IN, OUT)
Mini jack (stereo) (×2)
5 Vp-p

SPEAKERS 6 to 16 ohms, 7 W + 7 W (when the impedance is 8 ohms)

General

Power requirements
100 to 120 V AC, 50/60 Hz, 3.9 A/380 W
220 to 240 V AC, 50/60 Hz, 2.0 A/360 W

Operating conditions
Temperature: 0°C to 35°C (32°F to 95°F)
Humidity: 20% to 90% (no condensation)
Atmospheric pressure: 700 to 1060 hPa

(Continued)

3-864-658-01(1)

Mounting Bracket

Installation Manual for Dealers

MB-514

© 1998

PFK-50A1WU/PFN-50A1WE

PFM-500A1WU/PFM-500A1WE

WARNING

Install the monitor on a wall that can hold a weight of at least 400kg (881lb14 oz). Reinforce the wall, if needed.

1-21

Table of contents

English

Overview 5
Parts List 5
Installation 6
Specifications 12

Overview

The mounting bracket MB-514 is designed to install the Sony flat panel monitor PFM-500A1WU/500A1WE on a wall.

Parts List

(a)	Wall bracket (1)	
(b)	Mounting bracket (1)	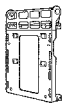
(c)	Handle (1)	
(d)	Knob (2)	
(e)	Screw M5 (8)	

Installation

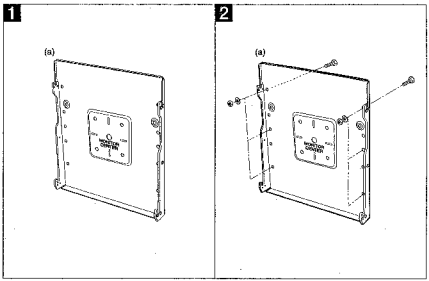

English

1 Decide where on the wall you want to install the wall bracket (a).
The center hole of the wall bracket will be matched the center of the monitor panel.

2 Install the wall bracket (a) on the wall.
Use six M8 bolts or concrete anchors, six nuts and six washers (not supplied).

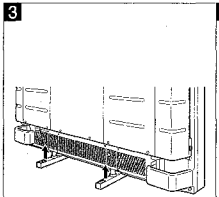

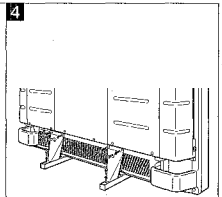

English

3 Pull down the retractable feet and stand the monitor up.
For details on using the retractable feet, see the Operating Instructions for the Sony flat panel monitor PFM-500A1WU/500A1WE.

If the retractable feet and the foot support brackets are already installed on the monitor, go to Step 4. Otherwise, go to Step 5.

4 Remove the foot support brackets from the retractable feet.
For details on removing the foot support brackets, see the Operating Instructions for the Sony flat panel monitor PFM-500A1WU/500A1WE.

7

Installation

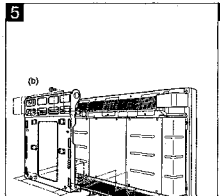

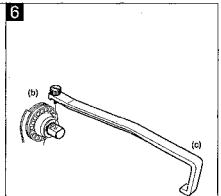

English

5 Install the mounting bracket (b) on the flat monitor. Match the mounting bracket screw holes to the monitor screw holes, then insert and tighten eight M5 screws (a) to lock the bracket onto the monitor.

6 Attach the handle (c) on the mounting bracket (b) with the supplied screw (provided with the handle).

8

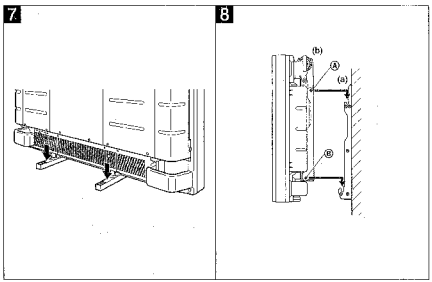

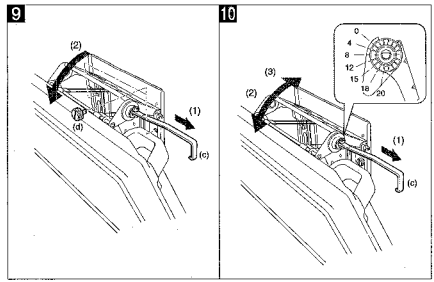

English

7 Store the retractable feet.
For details on using the retractable feet, see the Operating Instructions for the Sony flat panel monitor PFM-500A1WU/500A1WE.

8 Install the flat monitor with the mounting bracket (b) on the wall bracket (a).
Hook two mounting bracket shafts Ⓐ, Ⓑ on the wall bracket grooves.

Note

Make sure that the shafts hook properly into the grooves.

English

9 Lock the mounting bracket shafts (hooked in Step 8) by turning two knobs (d) so that the shafts do not move vertically.
Pull the handle (c) out (installed in Step 6) and unsnap the lock. Pull down the monitor panel so the mounting bracket angle is fully extended. Turn two knobs (d) and lock the monitor panel.

10 Adjust the monitor panel angle.
You can change the angle from 0° to 20° (7 levels). (Approx. 0°, 4°, 8°, 12°, 15°, 18° and 20°)
(1) Pull the handle (c) down to unsnap the lock.
(2) Push the panel to the desired angle.
(3) Let go of the handle and adjust the panel angle so it can be locked.

See the angle marks.

11

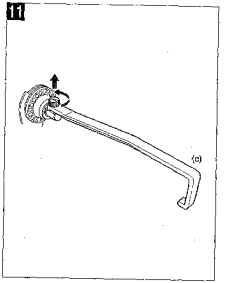

English

11 Loosen the screw and remove the handle.

Store the handle with the Operating Instructions.

Specifications

Dimensions

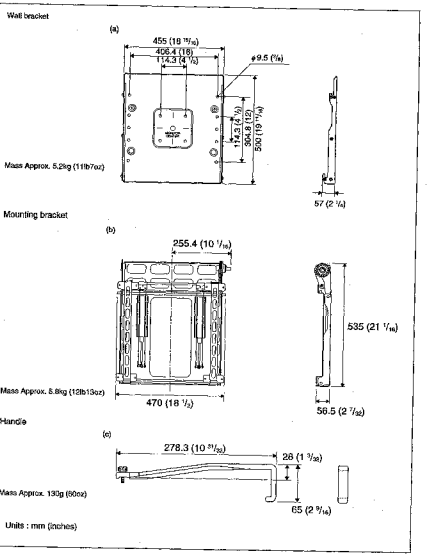

Dimensions of the assembled bracket

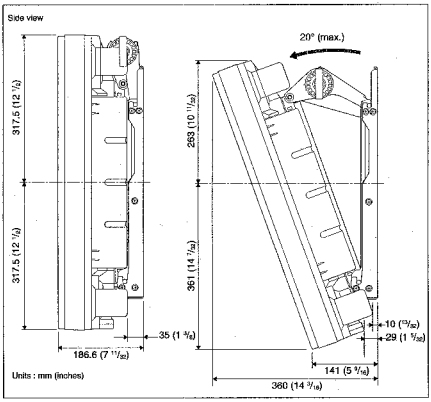

Design and specifications are subject to change without notice.

SECTION 2
SERVICE INFORMATION

2-1. CIRCUIT BOARDS LOCATION

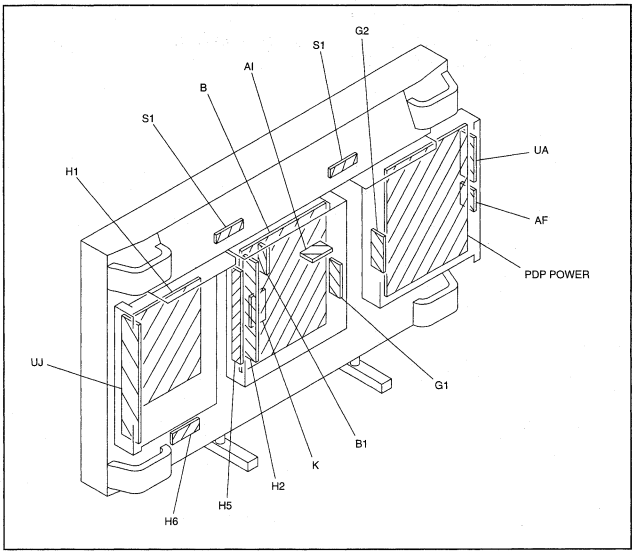

2-2. DISASSEMBLY

NOTE: When removing the power block from the main unit, start performing more than 30 seconds after the main power is turned off.

2-2-1. I/O AND POWER BLOCKS REMOVAL AND EXTENSION CABLE CONNECTION

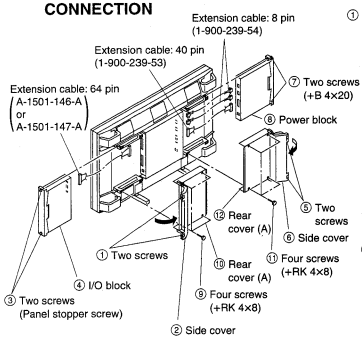

2-2-2. H1 AND UJ BOARDS REMOVAL

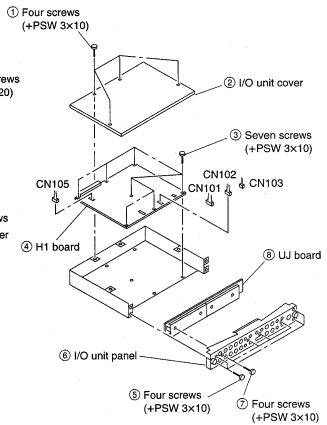

2-2-3. AF, G2, UA AND PDP POWER BOARDS REMOVAL

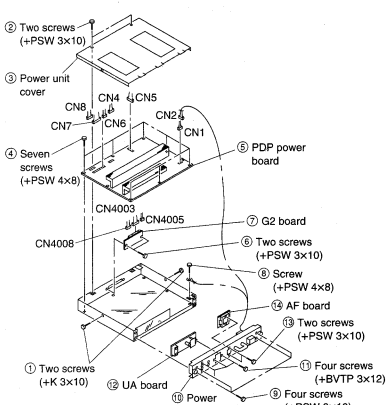

2-2-4. G1, H5 AND B BOARDS REMOVAL

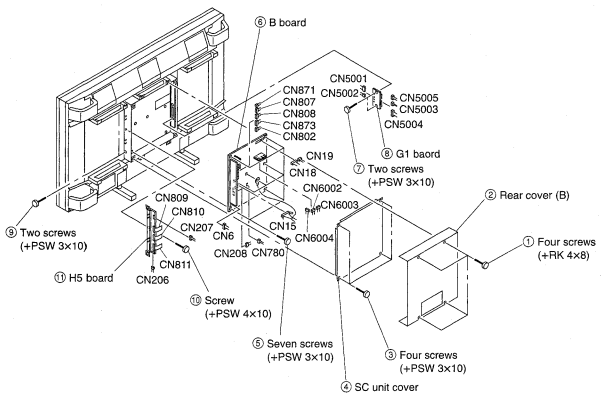

2-2-5. K BOARD REMOVAL

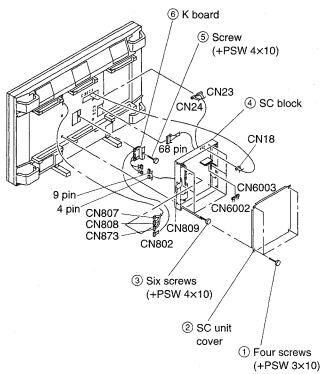

2-2-6. BEZEL ASSY AND H6 BOARD REMOVAL

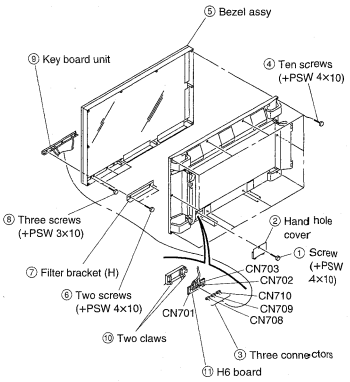

2-2-7. PLASMA DISPLAY PANEL AND S1 BOARD REMOVAL

- **Remove the three connectors . (CN23, 24, 68 pin)**

[Refer to 2-2-5. K BOARD REMOVAL]

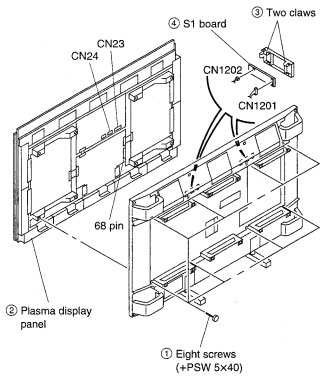

2-2-8. FAN COVER REMOVAL

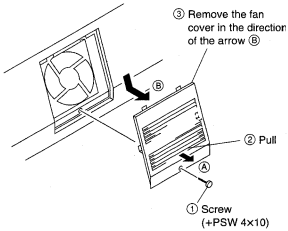

SECTION 3
ELECTRIC ADJUSTMENT IN THE SERVICE MODE

3-1. Electric Adjustment in the Service mode

Electric adjustment can be performed with the Remote Commander RM-921 attached to the set.
Adjustable items in the SERVICE mode is as follows.

MEMORY RESET ..... Resets the EEPROM.
PIC CONTROL ..... Adjusts the level of analog signal circuits.
W/B ADJUST ..... Adjusts the gain of A/D converter and digital gamma circuit, and adjusts the sub bright.
PIC SIZE ..... Adjusts picture size.
CONFIG ..... Sets special functions.
STATUS ..... Checks internal status.

To enter the SERVICE mode, with the set in standby status, press [DISPLAY] → [5] → [VOL +] → [POWER] in this order.

• Remote Commander functions in SERVICE mode

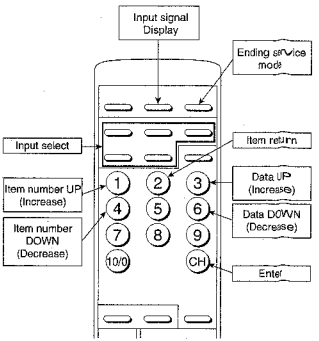

• Adjustment required in SERVICE MAN mode

Adjustment in the SERVICE MAN mode is required if either of the following repairs was made.

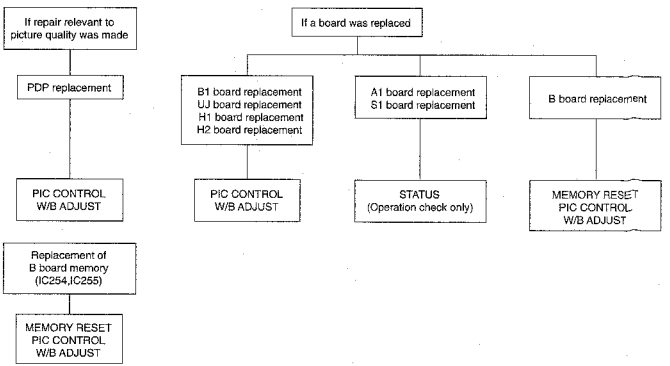

SERVICE MENU

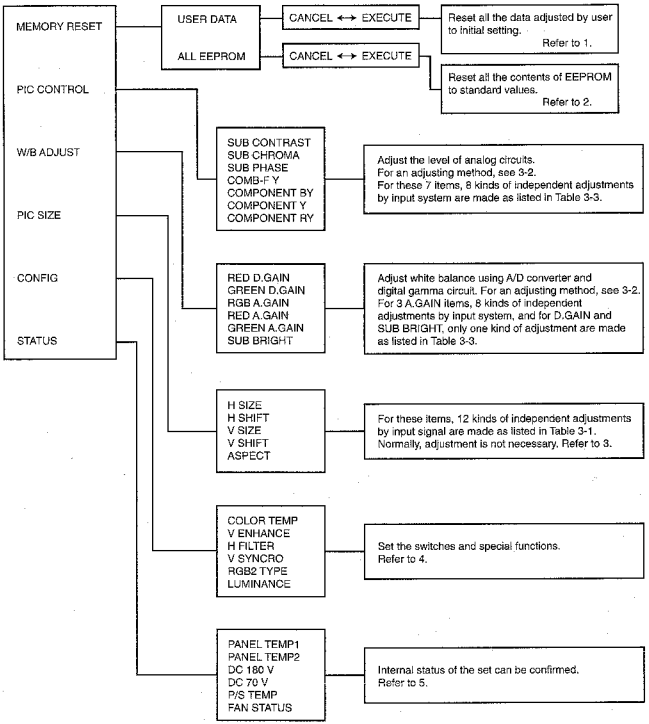

1. USER DATA RESET (MEMORY RESET)

Items reset to initial setting, when executed.

CONTRAST 80
BRIGHTNESS 00
CHROMA 00
PHASE 00
COLOR TEMP ..... HIGH
PICTURE AGC ..... ON
H SIZE 00
H SHIFT 00
V SIZE 00
V SHIFT 00
ZOOM ..... × 1
ASPECT ..... 4 × 3 (16 × 9 for HDTV)
V ENHANCE ..... ON
H FILTER ..... AUTO
DISPLAY ..... ON
POWER SAVE ..... OFF
LANGUAGE ..... ENGLISH
REMOTE MODE ..... TV
REMOTE ONLY ..... OFF

And, five kinds of user data of the MEMORY menu are all become empty.

2. ALL EEPROM RESET (MEMORY RESET)

All areas in EEPROM are reset to standard values saved in thesystem controller. Use this command when EEPROM was replaced.

Be careful when executing this command, because all data including service video data and service size data are rewritten.

3. PIC SIZE

..... Read also "Precautions on Adjustment"

Use this command when the picture size is to be adjusted.

This adjustment determines standard value in executing the reset of the user menu.

Even if the data are erased due to EEPROM replacement, execu-tion of b) ALL EEPROM RESET allows 12 kinds of preset data saved in the system controller to be all copied, and therefore normally the adjustment is not necessary.

4. CONFIG

- COLOR TEMP/V ENHANCE/H FILTER

  ..... Read also "Precautions on Adjustment"

  This adjustment determines standard value in executing the reset of the user menu.

  Use this command when individual items are to be re-set.

  Even if the data are erased due to EEPROM replacement, execu-tion of b) ALL EEPROM RESET allows 12 kinds of preset data saved in the system controller to be all copied, and therefore normally the re-setting is not necessary.
- V SYNCRO

  This model provides the field interpolating function for optimum movie processing at the video input (NTSC, PAL, HDTV). When turning off the V SYNCRO, the image processing is switched from field interpolation mode to VGA conversion mode. Normally, turn ON the V SYNCRO.
- RGB2 TYPE

  Change setting from RGB to YUV, if mounting optional SDI.

  Setting the RGB2 TYPE to "YUV" enables the input of YUV signals. In this case, input display of OSD is SDI.

  Normally, select RGB.
- LUMINANCE

  The use of optical sensor (S1 board) set on the back side of PDP can measure the age-based change of panel luminance. The initial value of luminance is set at the factory shipment.

  If the LUMINANCE is changed from CANCEL to EXECUTE, and executed, the set automatically restarts the power and measures the luminance. The measurement completes in about 25 seconds and displays in % the luminance change to the initial value.

  A measurement error of ± 3% may be generated depending on the measurement condition (temporary characteristic change of fluorescent material).

  During measurement, cover the front side of set with a blackout cloth to shield external light. A bright measurement place will cause a measurement error.

Precautions on Adjustment

Preset data by input signal

COLOR TEMP
H SIZE
H SHIFT
V SIZE
V SHIFT
ASPECT
V ENHANCE
H FILTER

are related to the preset 12 kinds of signal timing (Table 3-1), and accordingly if no signal or unspecified signal is entered, "NOT ADJUSTABLE" is displayed at the top of screen, and at the same time, above 8 items are displayed in blue. At this time, each data is the center value.
If either item is adjusted with unspecified signal input, the input signal timing is written to the MODE12 (ATI 1280*1024) area in Table 3-2.
Normally, do not make adjustment under "NOT ADJUSTABLE" condition.
The unspecified signal timing written to the MODE12 is reset to the initial setting by executing ALL EEPROM RESET.

5. STATUS

- PANEL TEMP1
  The temperature data from thermal sensor mounted on the S1 board on the power supply block side (panel back side at top of set) is displayed in [°C].
  Whether this temperature is faulty or not is given in "4-3. Trouble Codes List".
- PANEL TEMP2
  The temperature data from thermal sensor mounted on the S1 board on the signal input terminal board block side (panel back side at top of set) is displayed in [°C].
  Whether this temperature is faulty or not is given in "4-3.Trouble Codes List".
- DC 180V
  180V DC voltage supplied to the PDP is displayed in [V].
  Whether this voltage is faulty or not is given in "4-3. Trouble Codes List".
- DC 70V
  70V DC voltage supplied to the PDP is displayed in [V].
  Whether this voltage is faulty or not is given in "4-3. Trouble Codes List".
- P/S TEMP
  Criterion data from thermal sensor built in the power supply block is displayed. If normal, "OK" is displayed.
  "NG" is displayed if a temperature rise of power supply block exceeds allowable value.
  For the trouble of this temperature, see "4-3. Trouble Codes List".
- FAN STATUS
  Operating statuses of five cooling fans built in the set are displayed individually.
  "L" is displayed if normal, or "H" if abnormal.
  The relation between fan position and display is as shown below.

FAN STATUS : L L L L L

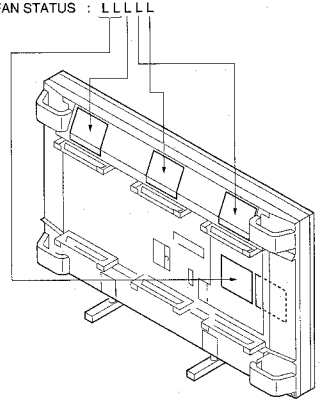

For the trouble of these fans, see "4-3. Trouble Codes List".

Table 3-1 Factory Preset Data

MODE	NAME	CLOCK (Mhz)	H.FREQ (KHz)	V.FREQ (Hz)	EXT (H/V)	COMP VIDEO	COLOR TEMP	ASPECT	V ENHANCE	H FILTER
1	NTSC	14.318	15.734	59.94		YES	HIGH	4 × 3	ON	AUTO
2	PAL	17.75	15.625	50		YES	HIGH	4 × 3	ON	AUTO
3	HDTV	37.125	33.75	59.94			HIGH	16 × 9	ON	AUTO
4	VGA	25.175	31.469	59.94	(-/-)		HIGH	4 × 3	ON	AUTO
5	VGA (TEXT)	28.332	31.469	70.111	(-/+)		HIGH	4 × 3	ON	AUTO
6	MAC13"	30.24	35	66.667	(-/-)		HIGH	4 × 3	ON	AUTO
7	MAC16"	57.285	49.727	74.553	(-/-)		HIGH	4 × 3	ON	AUTO
8	VESA800*600	40	37.879	60.317	(+/+)		HIGH	4 × 3	ON	AUTO
9	VESA1024*768	65	48.363	60.004	(-/-)		HIGH	4 × 3	ON	AUTO
10	ATI1280*1024	110	63.953	59.94	(-/-)		HIGH	4 × 3	ON	AUTO
11	MAC21"	100	68.681	75.061	(-/-)		HIGH	4 × 3	ON	AUTO
12	ATI1280*1024	135	79.976	75.025	(+/+)		HIGH	4 × 3	ON	AUTO

Table 3-2 Preset timing

MODE	1		2		3		4		5		6		7		8		9		10		11		12	
NAME	NTSC		PAL		HDTV		VGA		VGA (TEXT)		MAC13"		MAC16"		VESA800×600		VESA1024×768		ATI1280×1024		MAC21"		ATI1280×1024	
RESOLUTION	753×483		923×573		960×1034		640×480		720×400		640×480		832×624		800×600		1024×768		1280×1024		1152×870		1280×1024	
CLOCK (MHz)	14.318		17.75		37.125		25.175		28.332		30.24		57.285		40		65		110		100		135	
HORIZONTAL																								
H. FREQ (KHz)	15.734		15.625		33.75		31.469		31.469		35		49.727		37.879		48.363		63.953		68.681		79.976	
	μ sec	dots	μ sec	dots	μ sec	dots	μ sec	dots	μ sec	dots	μ sec	dots	μ sec	dots	μ sec	dots	μ sec	dots	μ sec	dots	μ sec	dots	μ sec	dots
H. TOTAL	63.555	910	64	1136	29.63	1100	31.778	800	31.766	900	28.571	864	20.11	1152	26.4	1056	20.667	1344	15.64	1720	14.56	1456	12.504	1688
H. BLK	10.9	156	12	213	3.771	140	6.356	160	6.353	180	7.407	224	5.586	320	6.4	256	4.923	320	4	440	3.04	3.4	3.022	408
H. FP	1.5	22	1.5	26	0.593	22	0.636	16	0.635	18	2.116	64	0.559	32	1	40	0.369	24	0.727	80	0.32	32	0.119	16
H. SYNC	4.7	67	4.7	84	0.593	22	3.813	96	3.812	108	2.116	64	1.117	64	3.2	128	2.092	136	1.018	112	1.28	128	1.067	144
H. BP	4.7	67	5.8	103	2.586	96	1.907	48	1.906	54	3.175	96	3.91	224	2.2	88	2.462	160	2.255	248	1.44	144	1.837	248
H. ACTIVE	52.656	754	52	923	25.859	960	25.422	640	25.413	720	21.164	640	14.524	832	20	800	15.754	1024	11.64	1280	11.52	1152	9.418	1280
VERTICAL																								
V. FREQ (Hz)	59.94		50		59.94		59.94		70.111		66.667		74.553		60.317		60.004		59.94		75.061		75.025	
	m sec	lines	m sec	lines	m sec	lines	m sec	lines	m sec	lines	m sec	lines	m sec	lines	m sec	lines	m sec	lines	m sec	lines	m sec	lines	m sec	lines
V. TOTAL	16.683	262.5	20	312.5	16.667	562.5	16.683	525	14.263	449	15	525	13.413	667	16.579	628	16.666	806	16.688	1067	13.323	915	13.329	1066
V. BLK	1.303	20.5	1.632	25.5	1.348	45.5	1.43	45	1.557	49	1.286	45	0.865	43	0.739	28	0.786	38	0.673	43	0.655	45	0.525	42
V. FP	0.254	4	0.192	3	0.178	6	0.318	10	0.381	12	0.086	3	0.06	3	0.026	1	0.062	3	0.016	1	0.044	3	0.013	1
V. SYNC	0.191	3	0.16	2.5	0.148	5	0.064	2	0.064	2	0.086	3	0.06	3	0.106	4	0.124	6	0.078	5	0.044	3	0.038	3
V. BP	0.858	13.5	1.28	20	1.022	34.5	1.049	33	1.112	35	1.114	39	0.744	37	0.607	23	0.6	29	0.579	37	0.568	39	0.475	38
V. ACTIVE	15.381	242	18.368	287	15.319	517	15.253	480	12.706	400	13.714	480	12.549	624	15.84	600	15.88	768	16.015	1024	12.67	870	12.8	1024
SYNC																								
SOG					YES						YES													
EXT (H/V)							(-/-)		(-/+)		(-/-)		(-/-)		(+/+)		(-/-)		(-/-)		(-/-)		(+/+)	
COMP VIDEO	YES		YES																					
VIDEO LEVEL	0.714V		0.700V		0.714V		0.714V		0.714V		0.714V		0.714V		0.714V		0.714V		0.714V		0.714V		0.714V	
SYNC LEVEL	0.286V		0.300V		0.286V		TTL		TTL		0.286V		TTL		TTL		TTL		TTL		TTL		TTL	

3-2. Adjustment of respective signal levels

3-2-1. RGB level adjustment

1. Make preparation for adjustment, input AC, input the gray scale of the VGA graphic (640 × 480) to RGB1, and select RGB1 via a Remote commander.
2. Observe the TP503 (B IN) with an oscilloscope, and adjust the RGB A.GAIN level with a Remote commander so that the signal level will be 1.10 V ± 0.01 V p-p. (Fig. 3-1)
3. Observe the TP501 (R IN) with an oscilloscope, and adjust the RED A.GAIN level with a Remote commander so that the signal level will be 1.10 V ± 0.01 V p-p. (Fig. 3-1)
4. Observe the TP502 (G IN) with an oscilloscope, and adjust the GREEN A.GAIN level with a Remote commander so that the signal level will be 1.10 V ± 0.01 V p-p. (Fig. 3-1)
5. Input the gray scale of the HIGH VISION (YPbPr) to the RGB1, and select the YUV mode with a Remote commander.
6. Observe the TP503 (B IN) with an oscilloscope, and adjust the RGB A.GAIN level with a Remote commander so that the signal level will be 1.10 V ± 0.01 V p-p. (Fig. 3-1)

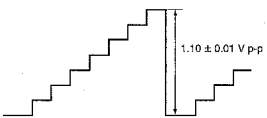

Fig. 3-1

3-2-2. YUV level adjustment

1. Input the YUV signal to the RGB1 Input terminal. The signal should be gray scale (NTSC).
2. Select the YUV mode via a Remote commander to enter the adjustment mode.
3. Observe the TP306 (G OUT) with an oscilloscope and adjust the COMPONENT Y level so that the signal level will be 0.70 V ± 0.01 V p-p. (Fig. 3-2)

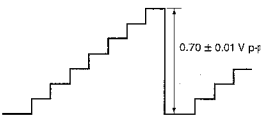

Fig. 3-2

4. Observe the TP503 (B IN) with an oscilloscope, and adjust the RGB A.GAIN level so that the signal level will be 1.10 V ± 0.01 V p-p. (Fig. 3-3)

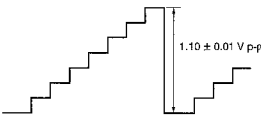

Fig. 3-3

5. Change the signal of 75 % color bar.
6. Adjust the COMPONENT B-Y so that the TP305 (B OUT) level and the B level will be the same. (Fig. 3-4)

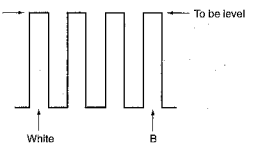

Fig. 3-4

7. Adjust the COMPONENT R-Y so that the TP307 (R OUT) level and the R level will be the same. (Fig. 3-5)

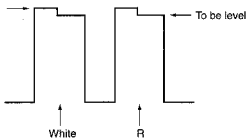

Fig. 3-5

8. Ensure tracking between 6 and 7.
9. Adjust the SUB PHASE so that all the signal levels of the TP305 (B OUT) will be the same. (Fig. 3-6)
   Standard level difference: Within 0.01 V

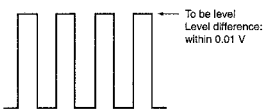

Fig. 3-6

10. The levels are not the same, ensure tracking among 6, 7 and 9.
11. Change the signal to the YUV of the PAL, and make the same adjustment as the NTSC.

Note: In the case of PAL, adjustment will be almost satisfactory when NTSC data are copied. So adjust only incorrect points after copying the data.

3-2-3. Y/C level adjustment

1. Input the gray scale of the NTSC to the Y/C input.
2. Select the Y/C with a Remote commander to enter the adjustment mode.
3. Observe the TP306 (G OUT) with an oscilloscope, and adjust the SUB CONTRAST so that the signal level will be 0.70 V ± 0.01 V p-p. (Fig. 3-7)

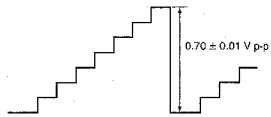

Fig. 3-7

4. Observe the TP503 (B IN) with an oscilloscope, and adjust the RGB A.GAIN level so that the signal level will be 1.10 V ± 0.01 V p-p. (Fig. 3-8)

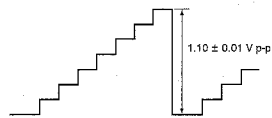

Fig. 3-8

5. Change the signal of 75 % color bar.
6. Adjust the SUB CHROMA so that the TP305 (B OUT) white level and the B level will be the same. (Fig. 3-9)

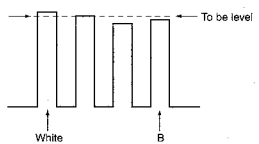

Fig. 3-9

7. Adjust the SUB PHASE so that all output will be the same. (Fig. 3-10)
   Standard: Within 0.01 V

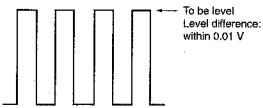

Fig. 3-10

8. Ensure tracking between 6 and 7.
9. Change the signal to the PAL and make the same adjustment as the case of the NTSC.

Note: In the case of the PAL, copy the NTSC data and then adjust incorrect points.

3-2-4. Adjustment of composite video level

1. Input the gray scale of the NTSC to the line input, and enter the LINE input mode with a Remote commander.
2. Enter the adjustment mode with a Remote commander, and input the RGB A.GAIN level that was adjusted by the YUV of NTSC. Input the SUB CONTRAST value that was adjusted by the Y/C input to the SUB CONT RAST.

3. Observe the TP306 (G OUT) with an oscilloscope, and adjust the COMB-F Y level so that the output level will be 0.70 V ± 0.01 V p-p.
   (Fig. 3-11)

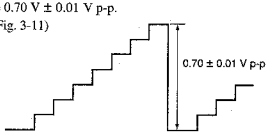

Fig. 3-11

4. Change the signal of 75% color bar, and adjust the SUB CHROMA so that the TP305 (B OUT) white level and the B level will be the same. (Fig. 3-12)

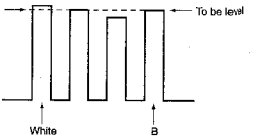

Fig. 3-12

5. Adjust the SUB PHASE so that all outputs will be the same. (Fig. 3-13)
   Standard: Within 0.01 V

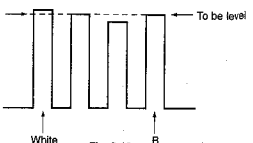

Fig. 3-13

6. Ensure tracking between 4 and 5.
9. Change the signal to the PAL and make the same adjustment as the case of the NTSC.

Note: In case of the PAL, adjustment will be almost satisfactory when NTSC data are copied. So adjust only incorrect points after copying the data.

3-2-5. SUB BRIGHTNESS ADJUSTMENT

1. Enter gray scale signal containing 10IRE to the LINE input.
2. Measure DC voltage at TP505 on the B board with a digital voltmeter. (GND: TP113)
3. Measure DC voltmeter at TP506 on the B board with a digital voltmeter, and adjust the SUB.BRIHT level with the remote commander with the measured value at TP505 ± 0.01 V.
4. Make sure that the screen brightens a little at 10IRE and it becomes the same level as blanking level 0IRE.

3-2-6. ADJUSTMENT OF WHITE BALANCE

(1) RGB system adjustment
1. Input the all white signal (80IRE) of the VGA graphic (640 × 480) to the RGB1 Input terminal.
2. Select the RGB1 via Remote commander to enter the adjustment mode.
3. Adjust the RED D.GAIN level and GREEN D.GAIN level so that the white balance level will be standards on 6500K.

(2) High Vision adjustment
1. Input the all white signal (80IRE) of the HIGH VISION to the RGB1 Input terminal.
2. Select the YUV via Remote commander to enter the adjustment mode.
3. Adjust the RED A.GAIN level and GREEN A.GAIN level so that the white balance level will be standards on 6500K.

(3) VIDEO system adjustment
1. Input the all white signal (80IRE) of the YUV (NTSC) to the RGB1 Input terminal.
2. Select the YUV via Remote commander to enter the adjustment mode.
3. Adjust the RED A.GAIN level and GREEN A.GAIN level so that the white balance level will be standards on 6500K.
4. Input the RED A.GAIN level and GREEN A.GAIN level that was adjusted by the YUV of NTSC when input to the LINE Input terminal (NTSC and PAL), Y/C Input terminal (NTSC and PAL) and RGB1 Input terminal (PAL).

Table 3-3

Data requiring overall adjustment									
		RGB1	YUV HDTV	YUV NTSC	YUV PAL	COMPOSITE NTSC	COMPOSITE PAL	Y/C NTSC	Y/C PAL
DA1	SUB CONTRAST	×	×	×	×	○	○	○	○
	SUB PHASE	×	×	○	○	○	○	○	○
	SUB CHROMA	×	×	×	×	○	○	○	○
DA2	RGB A.GAIN Level	○	○	○	○	○	○	○	○
	RED A.GAIN Level	○	○	○	○	○	○	○	○
	GREEN A. GAIN Level	○	○	○	○	○	○	○	○
	COMF Y Level	×	×	×	×	○	○	×	×
	COM Y Level	×	×	○	○	×	×	×	×
	COM R-Y Level	×	×	○	○	×	×	×	×
	COM B-Y Level	×	×	○	○	×	×	×	×
	RED D.GAIN Level	○	×	×	×	×	×	×	×
	GREEN D. GAIN Level	○	×	×	×	×	×	×	×

SECTION 4
TROUBLE SHOOTING

4-1. JUDGING METHOD WHEN PFM-500A1W IMAGE DOES NOT APPEAR

1. Flow chart

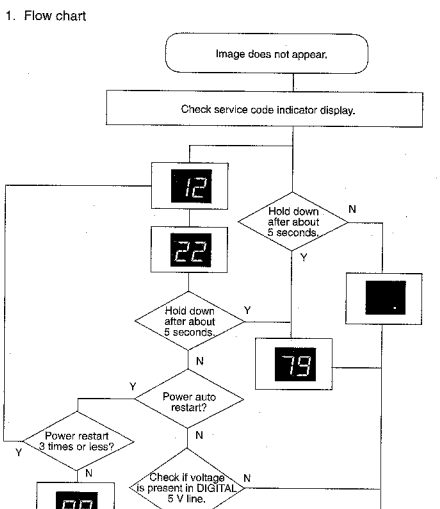

2. How to find PDP unit trouble

1) The power must be supplied normally to the PDP unit. This power is supplied through two black 8-pin connectors from the power unit. The kinds of power supply are 180 V line, 70 V line, and 5 V line.
2) As input signals, H.SYNC (negative polarity), V.SYNC (negative polarity), BLANKING (negative polarity), CLOCK and RGB digital data (8 bit × 3) must be entered normally and DISPEN must be "high".

If no images appears through the above conditions are satisfied, the PDP unit will be defective.

4-2. SELF DIAGNOSTIC FUNCTION

4-2-1. General description

The self diagnostic function of this set comprises four channels to detect analog voltage (180 V,70 V DC voltage for panel drive, and 2 kinds of panel back side temperature) using A/D converters, six channels of shift registers to detect fan operations and power supply temperature threshold values, and digital 5 V detection (microprocessor port). In case of an alarm or trouble, it displays a "trouble code" on the service code indicator in the power supply block, and also it blinks a standby indictor on the control panel and displays the detected data on the "STATUS" of the service menu. Further, it performs the "shut down" operation forcibly if an alarm status exceeds allowable value.

The detection items are as follows:

1. Detection of internal DC voltage 180 [V] rise and drop.
2. Detection of internal DC voltage 70 [V] rise and drop.
3. Detection of temperature rise at panel top on power supply block side, and shut down.
4. Detection of temperature rise at panel top on input terminal block side, and shut down.
5. Detection of fan operation stop.
   *Three fans at panel top, and two fans for power supply
6. Detection of temperature rise in power supply block.
7. Shut down by faulty 5 [V] for internal digital circuits.
8. Detection of EEPROM trouble
9. PDP trouble diagnosis by combining voltage detections, and shout down.

4-2-2. Trouble criteria

1. Internal DC voltage 180 [V] rise and drop
   (Service menu function name: DC 180 V)
   Normal range is reference voltage 180 [V] ± 36 [V].
   High voltage warning for more than 216 [V].
   Service code [11]
   Low voltage warning for less than 144 [V].
   Service code [12]
2. Internal DC voltage 70 [V] rise and drop
   (Service menu function name: DC 70 V)
   Normal range is reference voltage 70 [V] ± 14 [V].
   High voltage warning for more than 84 [V].
   Service code [21]
   Low voltage warning for less than 56[V].
   Service code [22]
3. Temperature rise at PDP panel back side top on power supply block side
   (Service menu function name: PTEMP1)
   Normal range is up to 58 [dC].
   High temp. warning for more than 59 [dC].
   Service code [31]
   Shut down for more than 68 [dC]. Service code [39]
4. Temperature rise at PDP panel back side top on input terminal block side
   (Service menu function name: P TEMP2)
   Normal range is up to 54 [dC].
   High temp. warning for more than 55 [dC].
   Service code [41]
   Shut down for more than 64 [dC]. Service code [49]
5. Cooling fan motor stop
   (Service menu function name: FAN)
   In the service menu STATUS, each fan status is displayed with "L" or "H".

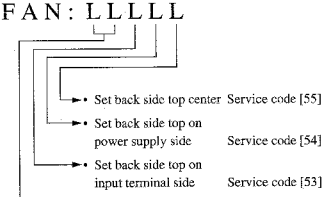

OSD display .....L for normal, or H for abnormal (stop)

6. Temperature rise in power supply block (Service menu function name: P/S TEMP)
   High temperature warning is output if the temperature of radiator panel for main converter in power supply block exceeds the allowable value. Service code [61]
7. Faulty 5 [V] for PDP and digital circuits (Service menu function name: None)
   The voltage entered to the system controller (IC252) pin 62 is detected.
   Shut down if no voltage is entered. Service code [79]
8. EEPROM Access error (Service menu function name: None)
   Warning if communication with EEPROM failed.
   EEPROM1 (IC254) error. Service code [81]
   EEPROM2 (IC255) error. Service code [82]
9. PDP trouble diagnosis (Service menu function name: None)
   The PDP will be troubled, if digital 5 V is normal but both DC 180 V and DC 70 V are not entered, among PDP drive voltages (DC 180 V, DC 70 V, and digital 5 V).
   When the following voltage conditions are all satisfied
   1) DC 180 V is less than 40 [V]
   2) DC 70 V is less than 20 [V]
   3) Digital 5 V is normal

   this function places the PDP in standby mode once, then restarts the power supply. It repeats this operation three times, and if the above three conditions are not recovered normally, it judges the PDP as trouble, and shuts it down. Service code [99]

4-3. PFM-500A1W TROUBLE CODES LIST

Display codes	Function Trouble Status	name
11	DC180V high voltage warning (over 216 V)	DC 180V
12	DC180V low voltage warning (below 144 V)	DC 180V
21	DC70V high voltage warning (over 84 V)	DC 70V
22	DC70V low voltage warning (below 56 V)	DC 70V
31	High temp. warning at panel top on power supply block side (over 59 °C)	PANEL TEMP1
39	Shut down by high temp. at panel top on power supply block side (over 68 °C)	PANEL TEMP1
41	High temp. warning at panel top on input terminal block side (over 55 °C)	PANEL TEMP2
49	Shut down by high temp. at panel top on input terminal block side (over 64 °C)	PANEL TEMP2
51	Power supply block intake fan 1 stop warning	FAN STATUS
52	Power supply block intake fan 2 stop warning	FAN STATUS
53	Panel top input terminal block exhaust fan stop warning	FAN STATUS
54	Panel top power supply block exhaust fan stop warning	FAN STATUS
55	Panel top center exhaust fan stop warning	FAN STATUS
61	Power supply block high internal temp. warning	P/S TEMP
79	Shut down by faulty 5V for digital circuits	
81	EEPROM1 Access error	
82	EEPROM2 Access error	
99	Shut down by panel trouble (when digital 5 V is normal, DC 180 V is below 40 V, and DC 70 V is below 20 V, the power supply is restarted 3 times repeatedly, but these voltages are not recovered normally)	

SECTION 5
SEMICONDUCTORS

BA10358F
CXA1211M
LM2903PS
MM1113XFBE
MM1114XFBE
TC4W53FU
TC7W14FU (TE12R)
TL026CPS-E05
TL082M
24LC21T/SN

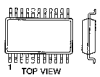

8pin SOP

BA7657F-E2
TA8184F (EL)
UPC659AGS-E2

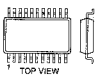

24pin SOP

CXA1779P
MC68HC05P6SC442119B

28pin DIP

CXD2024AQ
CXD303-105Q

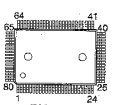

CXD2302Q

32pin QFP

EPC1PC8
MM1170BFB

8pin DIP

EPF10K20TC144-3

144pin QFP

HD6473257F10-IFM1

64pin QFP

HM530281-20
UPD23C8000XGX-340-E2

44pin SOP

ICS9161A-01CW16T
KS6369-20AP

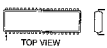

16pin DIP

LM35DZ

MAX202CSE
MC74HC4051F
MC74HC4052F
MC74HC4053F
MC74HC4538F
MC74HC589AFEL
MC74HC595AF
TC74VHC157F
TDA4665T-T

16pin SOP

MC74HC04AF
MC74HC08AF
MC74HC132AF
MC74HC4078AF
MC74HC74AF
SN74HC14ANS
TC74VHC00F
TC74VHC74F

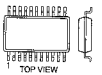

14pin SOP

M52036SP

20pin DIP

M6M80041FP

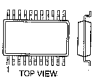

10pin SOP

M62352GP-75E
MC74HC244AF
SN74ABT540NS-E25
SN74ABT574NS-E20
TC35095AF
TC74VHC245F (EL)
TC74VHC574F
UPD6453GT-664-E2

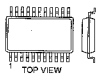

20pin SOP

TA78L09F-TE12L

TA8200AH

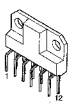

TC4S69F
TC7S08FU (TE85R)

5pin CHIP

UPC1093J-1-T

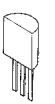

UPC1830GT-E2

42pin SOP

UPC1862GS-E2

36pin SOP

UPC2405HF
UPC24M12HF

UPD42280GU-30

28pin SOP

UPD485505G-25

24pin DIP

UPD6486GF-3BA

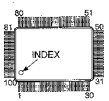

DTA114EK
DTA124EKA-T146
DTA144EK
DTA144EKA-T146
DTC114YKA-T146
DTC144EK
DTC144EKA-T146
2SA1036K-R
2SA1037AK-T146-R
2SA1162-G
2SC1623-L5L6

CL-170D-CD-T

DTZ-TT11-3.3B
DTZ4.7C
MA111
RD12SB2
RD5.6S-B
1SS355

D1N20R
RD10ESB2
RD36ES-B2

MA3100-TX
RD5.6M-B2

MA77

RD33EB3T

1SS226

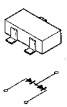

SECTION 6
EXPLODED VIEWS

NOTE:

- Items with no part number and no description are not stocked because they are seldom required for routine service.
- The construction parts of an assembled part are indicated with a collation number in the remark column.
- Items marked " * " are not stocked since they are seldom required for routine service. Some delay should be anticipated when ordering these items.

The componants identified by mark ⚠ are critical for safety. Replace only with part number specified.

Les composants identifiés par une marque ⚠ sont critiques pour la securite.
Ne les remplacer que par une piece portant le numero spécifié.

PFM-500A1WU/500A1WE

6-1. POWER BLOCK

●: 7-685-648-79 +BVTP3x12
▲: 7-682-950-09 +PSW3x12
▼: 7-682-249-04 +K3x10
◆: 7-682-261-09 +RK4x8
○: 7-682-949-09 +PSW3x10
△: 7-682-962-09 +PSW4x10
□: 7-682-566-04 +B4x20

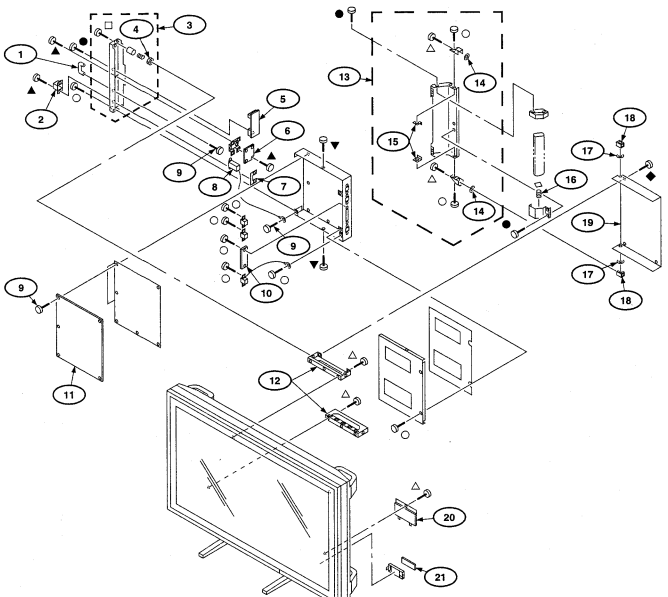

Rf.No.	Part No.	Description	Remark
1	* 4-052-200-01	HANDLE, PROTECTOR	
2	* 2-990-241-02	HOLDER (A), PLUG	
3	* X-4035-836-1	PANEL ASSY, POWER UNIT	4
4	* 3-648-057-00	NUT (ISO-4), U	
5	* A-1373-670-A	UA BOARD, COMPLETE	
6	* A-1294-154-A	AF BOARD, COMPLETE	
7	* 3-625-620-00	BRACKET, AC CONNECTOR	
8	* 1-239-874-11	FILTER, NOISE (GL-2080C1)	
9	* 4-066-309-01	SCREW, MACHINE, (+) P M4A-8	
10	* A-1311-645-A	G2 BOARD, COMPLETE	
11	⚠* 1-468-331-11	POWER, PDP	
12	* X-4035-835-1	BRACKET ASSY, REAR COVER	
13	* X-4035-827-1	COVER ASSY, SIDE	14, 15
14	* 3-696-510-01	WASHER (3), STOPPER	
15	* 4-065-249-01	NUT, PLATE	
16	* 3-669-594-00	SPRING, COMPRESSION	
17	* 3-701-444-21	WASHER, 6	
18	* 4-065-239-01	NUT	
19	* X-4035-830-1	COVER (A) ASSY, REAR	
20	* 4-065-262-01	COVER, HAND HOLE	
21	* A-1372-453-A	H6 BOARD, COMPLETE	

6-2. SC AND I/O BLOCKS

◆: 7-682-261-09 +RK4x8
○: 7-682-949-09 +PSW3x10
△: 7-682-962-09 +PSW4x10

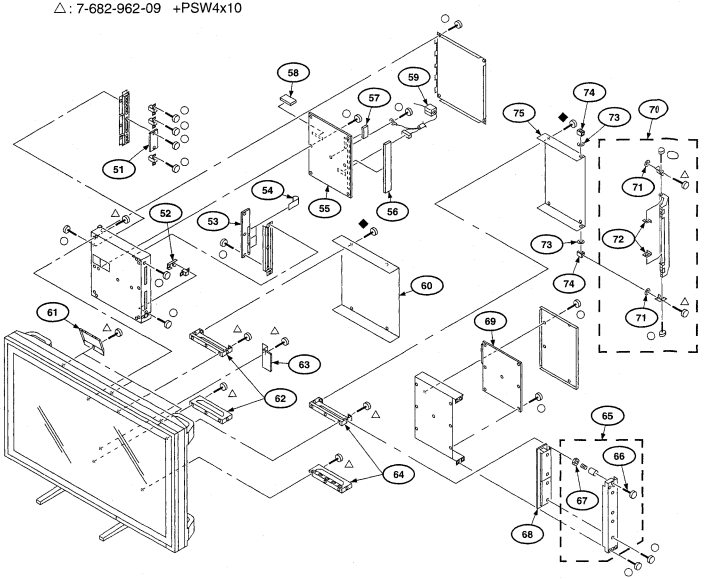

Rf.No.	Part No.	Description	Remark
51	* A-1311-644-A	G1 BOARD, COMPLETE	
52	* 4-065-253-01	NUT (A), PLATE	
53	* A-1372-454-A	H5 BOARD, COMPLETE	
54	* 1-575-455-11	WIRE, FLAT TYPE (30 CORE)	
55	* A-1131-324-A	B BOARD, COMPLETE	
56	* A-1372-452-A	H2 BOARD, COMPLETE	
57	* A-1131-325-A	B1 BOARD, COMPLETE	
58	* A-1294-135-A	AI BOARD, COMPLETE	
59	* 1-500-037-11	CORE, FERRITE (WITH CASE)	
60	* 4-065-283-01	COVER (B), REAR	
61	* 4-065-270-01	COVER, FAN	
62	* X-4035-917-1	BRACKET ASSY (B), REAR COVER	
63	* A-1380-574-A	S1 BOARD, COMPLETE	
64	* X-4035-835-1	BRACKET ASSY, REAR COVER	
65	* X-4035-837-1	PANEL ASSY, I/O UNIT	66, 67
66	* 4-050-804-01	SCREW, PANEL STOPPER	
67	* 3-648-057-00	NUT (ISO-4), U	
68	* A-1373-671-A	UJ BOARD, COMPLETE	
69	* A-1372-455-A	H1 BOARD, COMPLETE	
70	* X-4035-827-1	COVER ASSY, SIDE	71, 72
71	* 3-696-510-01	WASHER (3),	
72	* 4-065-249-01	NUT, PLATE	
73	* 3-701-444-21	WASHER, 6	
74	* 4-065-239-01	NUT	
75	* X-4035-830-1	COVER (A) ASSY, REAR	

6-3. CABINET BLOCK

■ : 7-682-973-49 +PSW5x16
○ : 7-682-949-09 +PSW3x10
△ : 7-682-962-09 +PSW4x10
▽ : 7-682-970-09 +PSW4x40
◇ : 7-682-965-01 +PSW4x16

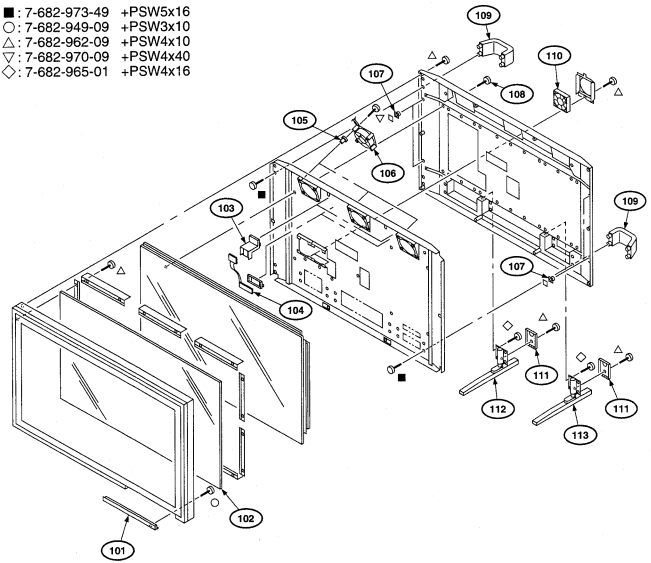

Rf.No.	Part No.	Description	Remark
101	* 1-475-914-11	BOARD UNIT, KEY	
102	* 1-758-200-11	GLASS, OPTICAL FILTER	
103	* 4-065-280-01	BRACKET, SENSOR	
104	* A-1390-878-A	S1 BOARD, COMPLETE	
105	* 4-062-616-01	BUSHING, RUBBER	
106	* 1-763-144-11	FAN, DC	
107	* 4-065-237-01	NUT, PLATE	
108	* 4-957-517-01	SCREW (5*-40), +PSW	
109	* 4-065-263-01	HANDLE	
110	* 1-763-143-11	DC FAN (WITH SENSOR)	
111	* 4-065-296-01	COVER, FOOT	
112	* X-4035-829-1	FOOT (L) ASSY	
113	* X-4035-828-1	FOOT (R) ASSY	

6-4. PACKING MATERIALS

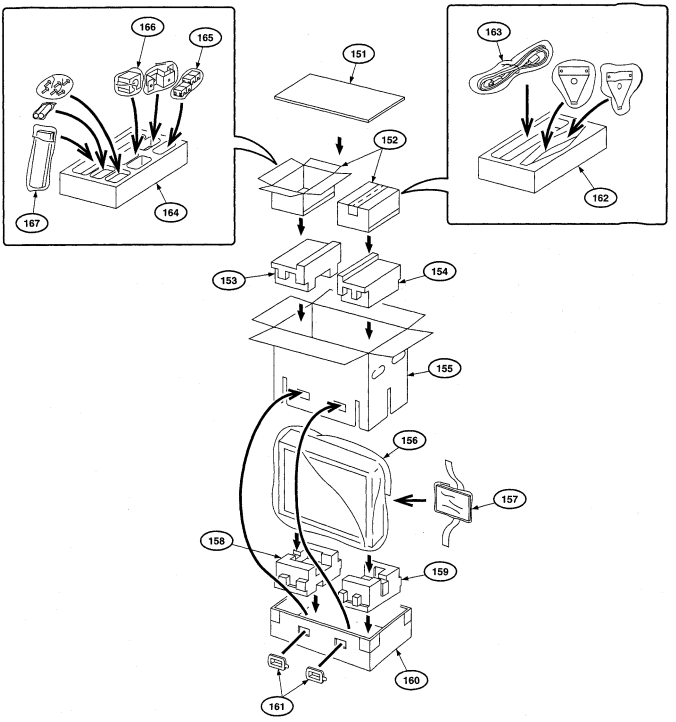

Rf.No.	Part No.	Description	Remark
151	* 4-066-055-01	COVER, TOP	
152	* 4-065-582-01	BOX, ACCESSORIES	
153	* 4-065-576-01	CUSHION, UPPER (L)	
154	* 4-065-577-01	CUSHION, UPPER (R)	
155	* 4-065-580-01	INDIVIDUAL CARTON	
156	* 4-375-488-02	BAG, PROTECTION	
157	3-864-200-01	MANUAL, INSTRUCTION	
158	* 4-065-578-01	CUSHION, LOWER (L)	
159	* 4-065-579-01	CUSHION, LOWER (R)	
160	* 4-065-581-01	TRAY	
161	* 3-674-673-01	STOPPER	
162	* 4-066-056-01	CUSHION (A)	
163	⚠ 1-558-527-11	CORD, POWER (3 CORE) [500A1WU]	
163	⚠ 1-590-151-11	SET, CODE [500A1WE]	
164	* 4-066-057-01	CUSHION (B)	
165	1-543-653-21	CORE ASSY, BEAD (DIVISION TYPE)	
166	2-990-242-01	HOLDER (B) [500A1WU]	
166	* 3-613-640-01	PLUG, HOLDER C [500A1WE]	
167	1-475-089-11	REMOTE COMMANDER (RM-921)	

MB-514

6-5. MB-514

●: 7-688-005-02 W5
▲: 7-682-948-09 +PSW3x8
▼: 7-682-961-09 +PSW4x8
■: 7-682-973-49 +PSW5x16
◆: 7-623-213-22 SW6
★: 7-688-006-12 W6
○: 7-624-197-71 C20
△: 7-688-000-26 W20
▽: 7-688-000-25 W16
□: 7-624-197-31 C16
◇: 7-684-026-04 N6

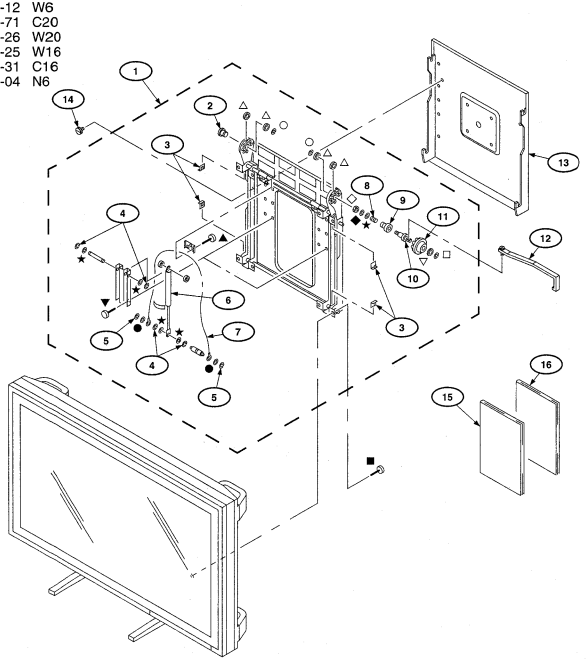

Rf.No.	Part No.	Description	Remark
1	*X-4035-976-11	BRACKET ASSY, MOUNTING	2-11
2	*4-066-350-01	SHAFT (B), FIXED	
3	*4-066-365-01	GUARD, EDGE	
4	3-618-078-00	RING, RETAINING, CE TYPE	
5	3-638-493-02	RING, RETAINING, CE	
6	*4-066-363-01	DAMPER, GAS	
7	4-066-364-01	ROPE, WIRE	
8	*4-066-351-01	SPRING, COMPRESSION	
9	*4-066-349-01	SHAFT (A), FIXED	
10	*4-066-362-01	PIN	
11	*4-066-361-01	BRACKET, LOCK	
12	X-4035-975-12	HANDLE ASSY	
13	*X-4035-977-11	BRASKET ASSY, WALL	
14	4-066-358-01	KNOB	
15	3-864-657-01	OPERATING INSTRUCTIONS	
16	3-364-658-01	INSTALLATION MANUAL FOR DEALER	

SECTION 7
ELECTRICAL PARTS LIST

NOTE:

The components identified by mark ⚠ are critical for safety. Replace only with part number specified.

Les composants identifiés par une marque ⚠ sont critiques pour la securite.
Ne les remplacer que par une piece portant le numero specifie.

- Items marked " * " are not stocked since they are seldom required for routine service. Some delay should be anticipated when ordering these items.
- All variable and adjustable resistors have characteristic curve B, unless otherwise noted.

When indicating parts by reference number, please include the board name.

RESISTORS
- All resistors are in ohms
- F : nonflammable

- CAPACITORS
  PF : μμ F

- There are some cases the reference number on one board overlaps on the other board. Therefore, when ordering parts by the reference number, please include the board name.

Rf.NO.	PART NO.	DESCRIPTION			REMARK
	* A-1131-324-A	B BOARD, COMPLETE			
		**********			
	* 1-526-652-21	SOCKET, IC (DP) 8P			
	4-623-699-01	SCREW (3X5)			
		<CAPACITOR>			
C1	1-164-004-11	CERAMIC CHIP 0.1MF	10%	25V	
C2	1-164-004-11	CERAMIC CHIP 0.1MF	10%	25V	
C3	1-164-004-11	CERAMIC CHIP 0.1MF	10%	25V	
C4	1-164-004-11	CERAMIC CHIP 0.1MF	10%	25V	
C5	1-164-492-11	CERAMIC CHIP 0.15MF	10%	16V	
C6	1-164-004-11	CERAMIC CHIP 0.1MF	10%	25V	
C7	1-164-004-11	CERAMIC CHIP 0.1MF	10%	25V	
C8	1-164-004-11	CERAMIC CHIP 0.1MF	10%	25V	
C9	1-164-004-11	CERAMIC CHIP 0.1MF	10%	25V	
C10	1-164-004-11	CERAMIC CHIP 0.1MF	10%	25V	
C11	1-164-004-11	CERAMIC CHIP 0.1MF	10%	25V	
C12	1-163-141-00	CERAMIC CHIP 0.001MF	5%	50V	
C13	1-164-004-11	CERAMIC CHIP 0.1MF	10%	25V	
C14	1-163-231-11	CERAMIC CHIP 15PF	5%	50V	
C15	1-163-231-11	CERAMIC CHIP 15PF	5%	50V	
C16	1-164-004-11	CERAMIC CHIP 0.1MF	10%	25V	
C17	1-164-004-11	CERAMIC CHIP 0.1MF	10%	25V	
C18	1-164-004-11	CERAMIC CHIP 0.1MF	10%	25V	
C19	1-164-004-11	CERAMIC CHIP 0.1MF	10%	25V	
C20	1-164-004-11	CERAMIC CHIP 0.1MF	10%	25V	
C21	1-135-216-11	TANTAL CHIP 10MF	20%	10V	
C22	1-135-216-11	TANTAL CHIP 10MF	20%	10V	
C23	1-163-237-11	CERAMIC CHIP 27PF	5%	50V	
C25	1-164-004-11	CERAMIC CHIP 0.1MF	10%	25V	
C26	1-135-216-11	TANTAL CHIP 10MF	20%	10V	
C29	1-164-004-11	CERAMIC CHIP 0.1MF	10%	25V	
C30	1-164-004-11	CERAMIC CHIP 0.1MF	10%	25V	
C31	1-164-004-11	CERAMIC CHIP 0.1MF	10%	25V	
C37	1-164-161-11	CERAMIC CHIP 0.0022MF	10%	50V	
C90	1-164-004-11	CERAMIC CHIP 0.1MF	10%	25V	
C91	1-164-004-11	CERAMIC CHIP 0.1MF	10%	25V	
C92	1-164-004-11	CERAMIC CHIP 0.1MF	10%	25V	
C100	1-164-004-11	CERAMIC CHIP 0.1MF	10%	25V	
C101	1-164-004-11	CERAMIC CHIP 0.1MF	10%	25V	
C102	1-164-004-11	CERAMIC CHIP 0.1MF	10%	25V	
C103	1-164-004-11	CERAMIC CHIP 0.1MF	10%	25V	
C104	1-164-004-11	CERAMIC CHIP 0.1MF	10%	25V	
C105	1-164-004-11	CERAMIC CHIP 0.1MF	10%	25V	
C106	1-164-004-11	CERAMIC CHIP 0.1MF	10%	25V	
C107	1-164-004-11	CERAMIC CHIP 0.1MF	10%	25V	
C108	1-164-004-11	CERAMIC CHIP 0.1MF	10%	25V	
C109	1-164-004-11	CERAMIC CHIP 0.1MF	10%	25V	
C110	1-164-004-11	CERAMIC CHIP 0.1MF	10%	25V	
C111	1-164-004-11	CERAMIC CHIP 0.1MF	10%	25V	
C112	1-164-004-11	CERAMIC CHIP 0.1MF	10%	25V	
C113	1-164-004-11	CERAMIC CHIP 0.1MF	10%	25V	
C140	1-135-216-11	TANTAL CHIP 10MF	20%	10V	
C141	1-135-216-11	TANTAL CHIP 10MF	20%	10V	
C142	1-135-216-11	TANTAL CHIP 10MF	20%	10V	
C150	1-164-004-11	CERAMIC CHIP 0.1MF	10%	25V	
C151	1-164-004-11	CERAMIC CHIP 0.1MF	10%	25V	
C152	1-164-004-11	CERAMIC CHIP 0.1MF	10%	25V	
C153	1-164-004-11	CERAMIC CHIP 0.1MF	10%	25V	
C154	1-164-004-11	CERAMIC CHIP 0.1MF	10%	25V	
C155	1-164-004-11	CERAMIC CHIP 0.1MF	10%	25V	
C156	1-164-004-11	CERAMIC CHIP 0.1MF	10%	25V	
C157	1-164-004-11	CERAMIC CHIP 0.1MF	10%	25V	
C158	1-164-004-11	CERAMIC CHIP 0.1MF	10%	25V	
C159	1-164-004-11	CERAMIC CHIP 0.1MF	10%	25V	
C160	1-164-004-11	CERAMIC CHIP 0.1MF	10%	25V	
C161	1-164-004-11	CERAMIC CHIP 0.1MF	10%	25V	
C162	1-164-004-11	CERAMIC CHIP 0.1MF	10%	25V	
C163	1-164-004-11	CERAMIC CHIP 0.1MF	10%	25V	
C190	1-135-216-11	TANTAL CHIP 10MF	20%	10V	
C191	1-135-216-11	TANTAL CHIP 10MF	20%	10V	
C192	1-135-216-11	TANTAL CHIP 10MF	20%	10V	
C199	1-163-021-91	CERAMIC CHIP 0.01MF	10%	50V	
C200	1-164-004-11	CERAMIC CHIP 0.1MF	10%	25V	
C201	1-164-004-11	CERAMIC CHIP 0.1MF	10%	25V	
C202	1-164-004-11	CERAMIC CHIP 0.1MF	10%	25V	
C203	1-164-004-11	CERAMIC CHIP 0.1MF	10%	25V	
C204	1-164-004-11	CERAMIC CHIP 0.1MF	10%	25V	
C205	1-164-004-11	CERAMIC CHIP 0.1MF	10%	25V	
C206	1-164-004-11	CERAMIC CHIP 0.1MF	10%	25V	
C207	1-164-004-11	CERAMIC CHIP 0.1MF	10%	25V	
C208	1-164-004-11	CERAMIC CHIP 0.1MF	10%	25V	

B

Rf.NO.	PART NO.	DESCRIPTION			REMARK
C209	1-164-004-11	CERAMIC CHIP 0.1MF	10%	25V	
C210	1-164-004-11	CERAMIC CHIP 0.1MF	10%	25V	
C211	1-164-004-11	CERAMIC CHIP 0.1MF	10%	25V	
C212	1-164-004-11	CERAMIC CHIP 0.1MF	10%	25V	
C213	1-164-004-11	CERAMIC CHIP 0.1MF	10%	25V	
C240	1-135-216-11	TANTAL. CHIP 10MF	20%	10V	
C241	1-135-216-11	TANTAL. CHIP 10MF	20%	10V	
C242	1-135-216-11	TANTAL. CHIP 10MF	20%	10V	
C248	1-164-004-11	CERAMIC CHIP 0.1MF	10%	25V	
C249	1-164-004-11	CERAMIC CHIP 0.1MF	10%	25V	
C250	1-164-004-11	CERAMIC CHIP 0.1MF	10%	25V	
C251	1-164-004-11	CERAMIC CHIP 0.1MF	10%	25V	
C252	1-164-004-11	CERAMIC CHIP 0.1MF	10%	25V	
C253	1-164-004-11	CERAMIC CHIP 0.1MF	10%	25V	
C254	1-164-004-11	CERAMIC CHIP 0.1MF	10%	25V	
C255	1-164-004-11	CERAMIC CHIP 0.1MF	10%	25V	
C256	1-164-004-11	CERAMIC CHIP 0.1MF	10%	25V	
C257	1-164-004-11	CERAMIC CHIP 0.1MF	10%	25V	
C259	1-164-004-11	CERAMIC CHIP 0.1MF	10%	25V	
C260	1-164-004-11	CERAMIC CHIP 0.1MF	10%	25V	
C281	1-126-964-11	ELECT 10MF	20%	50V	
C301	1-163-229-11	CERAMIC CHIP 12PF	5%	50V	
C302	1-163-089-00	CERAMIC CHIP 6PF	0.5PF	50V	
C317	1-107-701-11	ELECT 47MF	20%	16V	
C318	1-164-004-11	CERAMIC CHIP 0.1MF	10%	25V	
C319	1-107-701-11	ELECT 47MF	20%	16V	
C320	1-164-004-11	CERAMIC CHIP 0.1MF	10%	25V	
C321	1-107-701-11	ELECT 47MF	20%	16V	
C322	1-164-004-11	CERAMIC CHIP 0.1MF	10%	25V	
C329	1-164-004-11	CERAMIC CHIP 0.1MF	10%	25V	
C330	1-163-239-11	CERAMIC CHIP 33PF	5%	50V	
C331	1-163-131-00	CERAMIC CHIP 390PF	5%	50V	
C332	1-164-004-11	CERAMIC CHIP 0.1MF	10%	25V	
C333	1-163-127-00	CERAMIC CHIP 270PF	5%	50V	
C335	1-126-960-11	ELECT 1MF	20%	50V	
C336	1-164-004-11	CERAMIC CHIP 0.1MF	10%	25V	
C337	1-109-989-11	ELECT 1MF	20%	50V	
C338	1-164-004-11	CERAMIC CHIP 0.1MF	10%	25V	
C339	1-164-004-11	CERAMIC CHIP 0.1MF	10%	25V	
C340	1-164-004-11	CERAMIC CHIP 0.1MF	10%	25V	
C341	1-164-004-11	CERAMIC CHIP 0.1MF	10%	25V	
C342	1-164-004-11	CERAMIC CHIP 0.1MF	10%	25V	
C343	1-104-664-11	ELECT 47MF	20%	16V	
C344	1-104-664-11	ELECT 47MF	20%	16V	
C345	1-104-664-11	ELECT 47MF	20%	16V	
C346	1-126-961-11	ELECT 2.2MF	20%	50V	
C347	1-164-004-11	CERAMIC CHIP 0.1MF	10%	25V	
C348	1-164-004-11	CERAMIC CHIP 0.1MF	10%	25V	
C349	1-164-004-11	CERAMIC CHIP 0.1MF	10%	25V	
C350	1-163-017-00	CERAMIC CHIP 0.0047MF	10%	50V	
C351	1-164-004-11	CERAMIC CHIP 0.1MF	10%	25V	
C352	1-164-004-11	CERAMIC CHIP 0.1MF	10%	25V	
C353	1-164-004-11	CERAMIC CHIP 0.1MF	10%	25V	
C354	1-164-489-11	CERAMIC CHIP 0.22MF	10%	16V	
C355	1-164-004-11	CERAMIC CHIP 0.1MF	10%	25V	
C356	1-126-934-11	ELECT 220MF	20%	16V	
C357	1-126-960-11	ELECT 1MF	20%	50V	
C358	1-163-275-11	CERAMIC CHIP 0.001MF	5%	50V	
C359	1-126-963-11	ELECT 4.7MF	20%	50V	

Rf.NO.	PART NO.	DESCRIPTION			REMARK
C360	1-164-489-11	CERAMIC CHIP 0.22MF	10%	16V	
C361	1-163-227-11	CERAMIC CHIP 10PF	0.5PF	50V	
C362	1-163-021-91	CERAMIC CHIP 0.01MF	10%	50V	
C363	1-126-956-91	ELECT 0.1MF	20%	50V	
C364	1-164-489-11	CERAMIC CHIP 0.22MF	10%	16V	
C365	1-163-227-11	CERAMIC CHIP 10PF	0.5PF	50V	
C366	1-164-004-11	CERAMIC CHIP 0.1MF	10%	25V	
C367	1-164-489-11	CERAMIC CHIP 0.22MF	10%	16V	
C368	1-164-489-11	CERAMIC CHIP 0.22MF	10%	16V	
C369	1-164-004-11	CERAMIC CHIP 0.1MF	10%	25V	
C370	1-164-004-11	CERAMIC CHIP 0.1MF	10%	25V	
C371	1-164-004-11	CERAMIC CHIP 0.1MF	10%	25V	
C372	1-126-965-11	ELECT 22MF	20%	50V	
C373	1-163-251-11	CERAMIC CHIP 100PF	5%	50V	
C374	1-163-251-11	CERAMIC CHIP 100PF	5%	50V	
C375	1-104-664-11	ELECT 47MF	20%	16V	
C378	1-107-716-11	ELECT 33MF	20%	16V	
C379	1-107-716-11	ELECT 33MF	20%	16V	
C380	1-107-716-11	ELECT 33MF	20%	16V	
C381	1-163-021-91	CERAMIC CHIP 0.01MF	10%	50V	
C382	1-163-021-91	CERAMIC CHIP 0.01MF	10%	50V	
C383	1-164-004-11	CERAMIC CHIP 0.1MF	10%	25V	
C384	1-164-004-11	CERAMIC CHIP 0.1MF	10%	25V	
C385	1-164-004-11	CERAMIC CHIP 0.1MF	10%	25V	
C386	1-164-004-11	CERAMIC CHIP 0.1MF	10%	25V	
C387	1-164-004-11	CERAMIC CHIP 0.1MF	10%	25V	
C388	1-164-004-11	CERAMIC CHIP 0.1MF	10%	25V	
C389	1-164-004-11	CERAMIC CHIP 0.1MF	10%	25V	
C390	1-164-004-11	CERAMIC CHIP 0.1MF	10%	25V	
C391	1-164-489-11	CERAMIC CHIP 0.22MF	10%	16V	
C392	1-164-004-11	CERAMIC CHIP 0.1MF	10%	25V	
C397	1-164-004-11	CERAMIC CHIP 0.1MF	10%	25V	
C398	1-164-004-11	CERAMIC CHIP 0.1MF	10%	25V	
C401	1-164-004-11	CERAMIC CHIP 0.1MF	10%	25V	
C402	1-164-004-11	CERAMIC CHIP 0.1MF	10%	25V	
C403	1-164-004-11	CERAMIC CHIP 0.1MF	10%	25V	
C404	1-164-004-11	CERAMIC CHIP 0.1MF	10%	25V	
C405	1-135-216-11	TANTAL. CHIP 10MF	20%	10V	
C406	1-164-004-11	CERAMIC CHIP 0.1MF	10%	25V	
C501	1-164-004-11	CERAMIC CHIP 0.1MF	10%	25V	
C502	1-164-004-11	CERAMIC CHIP 0.1MF	10%	25V	
C503	1-126-933-11	ELECT 100MF	20%	16V	
C504	1-164-004-11	CERAMIC CHIP 0.1MF	10%	25V	
C505	1-164-004-11	CERAMIC CHIP 0.1MF	10%	25V	
C506	1-164-004-11	CERAMIC CHIP 0.1MF	10%	25V	
C507	1-164-004-11	CERAMIC CHIP 0.1MF	10%	25V	
C508	1-164-004-11	CERAMIC CHIP 0.1MF	10%	25V	
C509	1-164-004-11	CERAMIC CHIP 0.1MF	10%	25V	
C510	1-164-004-11	CERAMIC CHIP 0.1MF	10%	25V	
C511	1-126-933-11	ELECT 100MF	20%	16V	
C512	1-164-004-11	CERAMIC CHIP 0.1MF	10%	25V	
C513	1-164-004-11	CERAMIC CHIP 0.1MF	10%	25V	
C514	1-164-004-11	CERAMIC CHIP 0.1MF	10%	25V	
C515	1-164-004-11	CERAMIC CHIP 0.1MF	10%	25V	
C516	1-164-004-11	CERAMIC CHIP 0.1MF	10%	25V	
C517	1-164-004-11	CERAMIC CHIP 0.1MF	10%	25V	
C518	1-164-004-11	CERAMIC CHIP 0.1MF	10%	25V	
C520	1-126-933-11	ELECT 100MF	20%	16V	
C521	1-164-004-11	CERAMIC CHIP 0.1MF	10%	25V	
C522	1-164-004-11	CERAMIC CHIP 0.1MF	10%	25V	

Rf.NO.	PART NO.	DESCRIPTION			REMARK
C523	1-164-004-11	CERAMIC CHIP 0.1MF	10%	25V	
C524	1-164-004-11	CERAMIC CHIP 0.1MF	10%	25V	
C525	1-164-004-11	CERAMIC CHIP 0.1MF	10%	25V	
C526	1-164-004-11	CERAMIC CHIP 0.1MF	10%	25V	
C527	1-126-934-11	ELECT 220MF	20%	16V	
C528	1-126-933-11	ELECT 100MF	20%	16V	
C530	1-163-021-91	CERAMIC CHIP 0.01MF	10%	50V	
C531	1-104-664-11	ELECT 47MF	20%	25V	
C532	1-104-664-11	ELECT 47MF	20%	25V	
C533	1-126-960-11	ELECT 1MF	20%	50V	
C534	1-164-344-11	CERAMIC CHIP 0.068MF	10%	25V	
C535	1-126-964-11	ELECT 10MF	20%	50V	
C536	1-163-017-00	CERAMIC CHIP 0.0047MF	10%	50V	
C538	1-164-004-11	CERAMIC CHIP 0.1MF	10%	25V	
C539	1-164-004-11	CERAMIC CHIP 0.1MF	10%	25V	
C540	1-164-004-11	CERAMIC CHIP 0.1MF	10%	25V	
C541	1-163-809-11	CERAMIC CHIP 0.047MF	10%	25V	
C542	1-164-004-11	CERAMIC CHIP 0.1MF	10%	25V	
C543	1-163-809-11	CERAMIC CHIP 0.047MF	10%	25V	
C544	1-164-004-11	CERAMIC CHIP 0.1MF	10%	25V	
C545	1-163-809-11	CERAMIC CHIP 0.047MF	10%	25V	
C546	1-164-004-11	CERAMIC CHIP 0.1MF	10%	25V	
C547	1-164-004-11	CERAMIC CHIP 0.1MF	10%	25V	
C548	1-163-251-11	CERAMIC CHIP 100PF	5%	50V	
C549	1-164-004-11	CERAMIC CHIP 0.1MF	10%	25V	
C550	1-126-934-11	ELECT 220MF	20%	16V	
C551	1-163-251-11	CERAMIC CHIP 100PF	5%	50V	
C552	1-164-004-11	CERAMIC CHIP 0.1MF	10%	25V	
C553	1-164-004-11	CERAMIC CHIP 0.1MF	10%	25V	
C554	1-163-237-11	CERAMIC CHIP 27PF	5%	50V	
C555	1-163-251-11	CERAMIC CHIP 100PF	5%	50V	
C556	1-164-004-11	CERAMIC CHIP 0.1MF	10%	25V	
C557	1-164-004-11	CERAMIC CHIP 0.1MF	10%	25V	
C558	1-164-004-11	CERAMIC CHIP 0.1MF	10%	25V	
C559	1-104-664-11	ELECT 47MF	20%	25V	
C560	1-163-021-91	CERAMIC CHIP 0.01MF	10%	50V	
C561	1-164-004-11	CERAMIC CHIP 0.1MF	10%	25V	
C562	1-164-004-11	CERAMIC CHIP 0.1MF	10%	25V	
C563	1-164-004-11	CERAMIC CHIP 0.1MF	10%	25V	
C564	1-163-275-11	CERAMIC CHIP 0.001MF	5%	50V	
C565	1-163-021-91	CERAMIC CHIP 0.01MF	10%	50V	
C566	1-163-021-91	CERAMIC CHIP 0.01MF	10%	50V	
C567	1-163-253-11	CERAMIC CHIP 120PF	5%	50V	
C568	1-164-004-11	CERAMIC CHIP 0.1MF	10%	25V	
C569	1-164-004-11	CERAMIC CHIP 0.1MF	10%	25V	
C570	1-164-004-11	CERAMIC CHIP 0.1MF	10%	25V	
C571	1-164-004-11	CERAMIC CHIP 0.1MF	10%	25V	
C573	1-164-004-11	CERAMIC CHIP 0.1MF	10%	25V	
C574	1-164-004-11	CERAMIC CHIP 0.1MF	10%	25V	
C575	1-164-004-11	CERAMIC CHIP 0.1MF	10%	25V	
C580	1-126-934-11	ELECT 220MF	20%	16V	
C581	1-164-004-11	CERAMIC CHIP 0.1MF	10%	25V	
C590	1-163-243-11	CERAMIC CHIP 47PF	5%	50V	
C591	1-104-664-11	ELECT 47MF	20%	16V	
C592	1-164-004-11	CERAMIC CHIP 0.1MF	10%	25V	
C593	1-164-004-11	CERAMIC CHIP 0.1MF	10%	25V	
C600	1-164-004-11	CERAMIC CHIP 0.1MF	10%	25V	
C601	1-164-004-11	CERAMIC CHIP 0.1MF	10%	25V	
C602	1-104-664-11	ELECT 47MF	20%	25V	
C603	1-164-004-11	CERAMIC CHIP 0.1MF	10%	25V	

Rf.NO.	PART NO.	DESCRIPTION			REMARK
C604	1-164-004-11	CERAMIC CHIP 0.1MF	10%	25V	
C605	1-104-664-11	ELECT 47MF	20%	25V	
C606	1-104-664-11	ELECT 47MF	20%	25V	
C607	1-164-004-11	CERAMIC CHIP 0.1MF	10%	25V	
C608	1-164-004-11	CERAMIC CHIP 0.1MF	10%	25V	
C609	1-104-664-11	ELECT 47MF	20%	16V	
C610	1-104-664-11	ELECT 47MF	20%	16V	
C611	1-164-004-11	CERAMIC CHIP 0.1MF	10%	25V	
C612	1-104-664-11	ELECT 47MF	20%	16V	
C613	1-104-664-11	ELECT 47MF	20%	16V	
C614	1-164-004-11	CERAMIC CHIP 0.1MF	10%	25V	
C615	1-107-716-11	ELECT 33MF	20%	16V	
C616	1-163-021-91	CERAMIC CHIP 0.01MF	10%	50V	
C618	1-163-251-11	CERAMIC CHIP 100PF	5%	50V	
C619	1-163-251-11	CERAMIC CHIP 100PF	5%	50V	
C620	1-104-664-11	ELECT 47MF	20%	16V	
C701	1-164-004-11	CERAMIC CHIP 0.1MF	10%	25V	
C702	1-164-004-11	CERAMIC CHIP 0.1MF	10%	25V	
C703	1-164-004-11	CERAMIC CHIP 0.1MF	10%	25V	
C704	1-164-004-11	CERAMIC CHIP 0.1MF	10%	25V	
C705	1-164-004-11	CERAMIC CHIP 0.1MF	10%	25V	
C706	1-164-004-11	CERAMIC CHIP 0.1MF	10%	25V	
C707	1-164-004-11	CERAMIC CHIP 0.1MF	10%	25V	
C708	1-164-004-11	CERAMIC CHIP 0.1MF	10%	25V	
C709	1-164-004-11	CERAMIC CHIP 0.1MF	10%	25V	
C710	1-164-004-11	CERAMIC CHIP 0.1MF	10%	25V	
C711	1-164-004-11	CERAMIC CHIP 0.1MF	10%	25V	
C712	1-126-933-11	ELECT 100MF	20%	16V	
C713	1-126-933-11	ELECT 100MF	20%	16V	
C714	1-163-251-11	CERAMIC CHIP 100PF	5%	50V	
C715	1-163-251-11	CERAMIC CHIP 100PF	5%	50V	
C716	1-163-251-11	CERAMIC CHIP 100PF	5%	50V	
C717	1-163-251-11	CERAMIC CHIP 100PF	5%	50V	
C718	1-126-934-11	ELECT 220MF	20%	16V	
C719	1-164-004-11	CERAMIC CHIP 0.1MF	10%	25V	
C721	1-164-004-11	CERAMIC CHIP 0.1MF	10%	25V	
C728	1-104-653-11	ELECT 220MF	20%	16V	
C729	1-164-004-11	CERAMIC CHIP 0.1MF	10%	25V	
C730	1-164-004-11	CERAMIC CHIP 0.1MF	10%	25V	
C731	1-126-934-11	ELECT 220MF	20%	16V	
C732	1-164-004-11	CERAMIC CHIP 0.1MF	10%	25V	
C733	1-126-934-11	ELECT 220MF	20%	16V	
C734	1-104-664-11	ELECT 47MF	20%	16V	
C735	1-164-004-11	CERAMIC CHIP 0.1MF	10%	25V	
C736	1-164-004-11	CERAMIC CHIP 0.1MF	10%	25V	
C737	1-164-004-11	CERAMIC CHIP 0.1MF	10%	25V	
C738	1-164-004-11	CERAMIC CHIP 0.1MF	10%	25V	
C764	1-164-004-11	CERAMIC CHIP 0.1MF	10%	25V	
C765	1-126-934-11	ELECT 220MF	20%	16V	
C781	1-163-009-11	CERAMIC CHIP 0.001MF	10%	50V	
C784	1-163-009-11	CERAMIC CHIP 0.001MF	10%	50V	
C786	1-163-009-11	CERAMIC CHIP 0.001MF	10%	50V	
C803	1-164-004-11	CERAMIC CHIP 0.1MF	10%	25V	
C804	1-164-004-11	CERAMIC CHIP 0.1MF	10%	25V	
C805	1-164-004-11	CERAMIC CHIP 0.1MF	10%	25V	
C806	1-164-004-11	CERAMIC CHIP 0.1MF	10%	25V	
C807	1-126-934-11	ELECT 220MF	20%	16V	
C808	1-164-004-11	CERAMIC CHIP 0.1MF	10%	25V	
C809	1-126-934-11	ELECT 220MF	20%	16V	
C810	1-164-004-11	CERAMIC CHIP 0.1MF	10%	25V	

B

Rf.NO.	PART NO.	DESCRIPTION			REMARK
C811	1-126-934-11	ELECT	220MF	20%	10V
C812	1-164-004-11	CERAMIC CHIP	0.1MF	10%	25V
C813	1-126-934-11	ELECT	220MF	20%	16V
C814	1-164-004-11	CERAMIC CHIP	0.1MF	10%	25V
C815	1-164-004-11	CERAMIC CHIP	0.1MF	10%	25V
C816	1-164-004-11	CERAMIC CHIP	0.1MF	10%	25V
C817	1-164-004-11	CERAMIC CHIP	0.1MF	10%	25V
C818	1-126-934-11	ELECT	220MF	20%	16V
C819	1-164-004-11	CERAMIC CHIP	0.1MF	10%	25V
C820	1-126-934-11	ELECT	220MF	20%	16V
C821	1-126-934-11	ELECT	220MF	20%	16V
C822	1-164-004-11	CERAMIC CHIP	0.1MF	10%	25V
C823	1-164-004-11	CERAMIC CHIP	0.1MF	10%	25V
C824	1-164-004-11	CERAMIC CHIP	0.1MF	10%	25V
C825	1-164-004-11	CERAMIC CHIP	0.1MF	10%	25V
C826	1-164-004-11	CERAMIC CHIP	0.1MF	10%	25V
C827	1-164-004-11	CERAMIC CHIP	0.1MF	10%	25V
C828	1-164-004-11	CERAMIC CHIP	0.1MF	10%	25V
C829	1-164-004-11	CERAMIC CHIP	0.1MF	10%	25V
C830	1-164-004-11	CERAMIC CHIP	0.1MF	10%	25V
C831	1-164-004-11	CERAMIC CHIP	0.1MF	10%	25V
C832	1-164-004-11	CERAMIC CHIP	0.1MF	10%	25V
C833	1-164-004-11	CERAMIC CHIP	0.1MF	10%	25V
C834	1-164-004-11	CERAMIC CHIP	0.1MF	10%	25V
C835	1-164-004-11	CERAMIC CHIP	0.1MF	10%	25V
C836	1-164-004-11	CERAMIC CHIP	0.1MF	10%	25V
C837	1-164-004-11	CERAMIC CHIP	0.1MF	10%	25V
C1001	1-164-004-11	CERAMIC CHIP	0.1MF	10%	25V
C1002	1-104-664-11	ELECT	47MF	20%	16V
C1003	1-104-664-11	ELECT	47MF	20%	16V
C1004	1-164-004-11	CERAMIC CHIP	0.1MF	10%	25V
C1005	1-104-664-11	ELECT	47MF	20%	16V
C1006	1-163-231-11	CERAMIC CHIP	15PF	5%	50V
C1007	1-163-243-11	CERAMIC CHIP	47PF	5%	50V
C1008	1-163-253-11	CERAMIC CHIP	120PF	5%	50V
C1009	1-163-021-91	CERAMIC CHIP	0.01MF	10%	50V
C1010	1-126-964-11	ELECT	10MF	20%	50V
C1011	1-107-698-11	ELECT	10MF	20%	25V
C1012	1-164-004-11	CERAMIC CHIP	0.1MF	10%	25V
C1013	1-164-004-11	CERAMIC CHIP	0.1MF	10%	25V
C1014	1-164-004-11	CERAMIC CHIP	0.1MF	10%	25V
C1015	1-164-004-11	CERAMIC CHIP	0.1MF	10%	25V
C1016	1-164-004-11	CERAMIC CHIP	0.1MF	10%	25V
C1017	1-164-004-11	CERAMIC CHIP	0.1MF	10%	25V
C1018	1-104-665-11	ELECT	100MF	20%	10V
C1019	1-164-004-11	CERAMIC CHIP	0.1MF	10%	25V
C1020	1-104-664-11	ELECT	47MF	20%	16V
C1021	1-164-004-11	CERAMIC CHIP	0.1MF	10%	25V
C1023	1-104-664-11	ELECT	47MF	20%	16V
C1024	1-164-004-11	CERAMIC CHIP	0.1MF	10%	25V
C1025	1-164-004-11	CERAMIC CHIP	0.1MF	10%	25V
C1026	1-164-004-11	CERAMIC CHIP	0.1MF	10%	25V
C1027	1-164-346-11	CERAMIC CHIP	1MF	16V	
C1028	1-164-004-11	CERAMIC CHIP	0.1MF	10%	25V
C1029	1-164-004-11	CERAMIC CHIP	0.1MF	10%	25V
C1030	1-164-004-11	CERAMIC CHIP	0.1MF	10%	25V
C1031	1-104-664-11	ELECT	47MF	20%	16V
C1032	1-164-004-11	CERAMIC CHIP	0.1MF	10%	25V
C1033	1-104-664-11	ELECT	47MF	20%	16V
C1034	1-164-004-11	CERAMIC CHIP	0.1MF	10%	25V

Rf.NO.	PART NO.	DESCRIPTION			REMARK
C1035	1-163-009-11	CERAMIC CHIP	0.001MF	10%	50V
C1036	1-104-664-11	ELECT	47MF	20%	16V
C1037	1-164-004-11	CERAMIC CHIP	0.1MF	10%	25V
C1038	1-163-021-91	CERAMIC CHIP	0.01MF	10%	50V
C1039	1-163-021-91	CERAMIC CHIP	0.01MF	10%	50V
C1040	1-164-004-11	CERAMIC CHIP	0.1MF	10%	25V
C1041	1-164-004-11	CERAMIC CHIP	0.1MF	10%	25V
C1042	1-164-004-11	CERAMIC CHIP	0.1MF	10%	25V
C1043	1-104-664-11	ELECT	47MF	20%	16V
C1044	1-163-021-91	CERAMIC CHIP	0.01MF	10%	50V
C1045	1-164-004-11	CERAMIC CHIP	0.1MF	10%	25V
C1046	1-104-664-11	ELECT	47MF	20%	16V
C1047	1-164-004-11	CERAMIC CHIP	0.1MF	10%	25V
C1048	1-163-021-91	CERAMIC CHIP	0.01MF	10%	50V
C1049	1-126-964-11	ELECT	10MF	20%	50V
C1050	1-163-091-00	CERAMIC CHIP	8PF	0.25PF	50V
C1051	1-104-664-11	ELECT	47MF	20%	16V
C1052	1-164-004-11	CERAMIC CHIP	0.1MF	10%	25V
C1053	1-164-004-11	CERAMIC CHIP	0.1MF	10%	25V
C1054	1-164-004-11	CERAMIC CHIP	0.1MF	10%	25V
C1055	1-104-664-11	ELECT	47MF	20%	16V
C1056	1-126-964-11	ELECT	10MF	20%	50V
C1057	1-164-004-11	CERAMIC CHIP	0.1MF	10%	25V
C1058	1-164-004-11	CERAMIC CHIP	0.1MF	10%	25V
C1059	1-163-021-91	CERAMIC CHIP	0.01MF	10%	50V
C1060	1-164-346-11	CERAMIC CHIP	1MF	16V	
C1061	1-126-960-11	ELECT	1MF	20%	50V
C1062	1-104-664-11	ELECT	47MF	20%	16V
C1063	1-164-004-11	CERAMIC CHIP	0.1MF	10%	25V
C1064	1-163-241-11	CERAMIC CHIP	39PF	5%	50V
C1065	1-163-021-91	CERAMIC CHIP	0.01MF	10%	50V
C1066	1-164-004-11	CERAMIC CHIP	0.1MF	10%	25V
C1067	1-164-004-11	CERAMIC CHIP	0.1MF	10%	25V
C1068	1-104-664-11	ELECT	47MF	20%	16V
C1069	1-104-664-11	ELECT	47MF	20%	16V
C1070	1-163-231-11	CERAMIC CHIP	15PF	5%	50V
C1071	1-163-243-11	CERAMIC CHIP	47PF	5%	50V
C1072	1-126-964-11	ELECT	10MF	20%	50V
C1073	1-163-021-91	CERAMIC CHIP	0.01MF	10%	50V
C1074	1-163-231-11	CERAMIC CHIP	15PF	5%	50V
C1075	1-164-004-11	CERAMIC CHIP	0.1MF	10%	25V
C1076	1-126-964-11	ELECT	10MF	20%	50V
C1077	1-164-004-11	CERAMIC CHIP	0.1MF	10%	25V
C1078	1-126-961-11	ELECT	2.2MF	20%	50V
C1079	1-126-960-11	ELECT	1MF	20%	50V
C1080	1-164-004-11	CERAMIC CHIP	0.1MF	10%	25V
C1081	1-104-664-11	ELECT	47MF	20%	16V
C1082	1-163-021-91	CERAMIC CHIP	0.01MF	10%	50V
C1083	1-163-021-91	CERAMIC CHIP	0.01MF	10%	50V
C1084	1-163-021-91	CERAMIC CHIP	0.01MF	10%	50V
C1085	1-126-959-11	ELECT	0.47MF	20%	50V
C1086	1-164-004-11	CERAMIC CHIP	0.1MF	10%	25V
C1087	1-164-004-11	CERAMIC CHIP	0.1MF	10%	25V
C1088	1-126-963-11	ELECT	4.7MF	20%	50V
C1090	1-163-227-11	CERAMIC CHIP	10PF	0.5PF	50V
C1091	1-163-227-11	CERAMIC CHIP	10PF	0.5PF	50V
C1092	1-164-004-11	CERAMIC CHIP	0.1MF	10%	25V
C1093	1-104-664-11	ELECT	47MF	20%	16V
C1094	1-163-243-11	CERAMIC CHIP	47PF	5%	50V

Rf.NO.	PART NO.	DESCRIPTION		REMARK
C1095	1-163-113-00	CERAMIC CHIP 68PF	5%	50V
C1096	1-164-004-11	CERAMIC CHIP 0.1MF	10%	25V
C1097	1-104-664-11	ELECT 47MF	20%	16V
C1098	1-164-004-11	CERAMIC CHIP 0.1MF	10%	25V
C1099	1-104-664-11	ELECT 47MF	20%	16V
C1100	1-164-004-11	CERAMIC CHIP 0.1MF	10%	25V
C1101	1-163-021-91	CERAMIC CHIP 0.01MF	10%	50V
C1102	1-163-021-91	CERAMIC CHIP 0.01MF	10%	50V
C1103	1-163-259-91	CERAMIC CHIP 220PF	5%	50V
C1104	1-163-145-00	CERAMIC CHIP 0.0015MF	5%	50V
C1105	1-163-021-91	CERAMIC CHIP 0.01MF	10%	50V
C1106	1-126-963-11	ELECT 4.7MF	20%	50V
C1107	1-164-004-11	CERAMIC CHIP 0.1MF	10%	25V
C1108	1-104-664-11	ELECT 47MF	20%	16V
C1109	1-163-275-11	CERAMIC CHIP 0.001MF	5%	50V
C1110	1-164-695-11	CERAMIC CHIP 0.0022MF	5%	50V
C1111	1-164-695-11	CERAMIC CHIP 0.0022MF	5%	50V
C1150	1-164-004-11	CERAMIC CHIP 0.1MF	10%	25V
C1151	1-164-004-11	CERAMIC CHIP 0.1MF	10%	25V
C1152	1-107-716-11	ELECT 33MF	20%	16V
C1153	1-104-664-11	ELECT 47MF	20%	16V
C1154	1-126-934-11	ELECT 220MF	20%	16V
C1155	1-164-004-11	CERAMIC CHIP 0.1MF	10%	25V
C1156	1-164-004-11	CERAMIC CHIP 0.1MF	10%	25V

<CONNECTOR>

CN1	1-774-532-11	CONNECTOR, BOARD TO BOARD 15P
CN2	1-774-531-11	CONNECTOR, BOARD TO BOARD 10P
CN6	1-506-476-11	PIN, CONNECTOR 11P
CN9	1-506-480-11	PIN, CONNECTOR 15P
CN10	1-774-530-11	CONNECTOR, BOARD TO BOARD 5P
CN11	1-774-530-11	CONNECTOR, BOARD TO BOARD 5P
CN12	1-774-532-11	CONNECTOR, BOARD TO BOARD 15P
CN13	1-774-532-11	CONNECTOR, BOARD TO BOARD 15P
CN14	1-774-532-11	CONNECTOR, BOARD TO BOARD 15P
CN15	*1-785-143-11	HEADER, CONNECTOR(PC BOARD)68P
CN16	1-774-531-11	CONNECTOR, BOARD TO BOARD 10P
CN17	1-774-531-11	CONNECTOR, BOARD TO BOARD 10P
CN18	1-506-480-11	PIN, CONNECTOR 15P
CN19	*1-564-005-11	PIN, CONNECTOR 6P
CN20	1-506-469-11	PIN, CONNECTOR 4P
CN780	1-506-471-11	PIN, CONNECTOR 6P

<DIODE>

D1	8-719-033-86	DIODE CL-170D-CD-T
D16	8-719-158-49	DIODE RD12SB2
D17	8-719-158-49	DIODE RD12SB2
D18	8-719-158-49	DIODE RD12SB2
D19	8-719-158-49	DIODE RD12SB2
D20	8-719-158-49	DIODE RD12SB2
D21	8-719-158-49	DIODE RD12SB2
D22	8-719-158-49	DIODE RD12SB2
D23	8-719-158-49	DIODE RD12SB2
D203	8-719-404-49	DIODE MA111
D204	8-719-404-49	DIODE MA111
D322	8-719-800-76	DIODE 1SS226
D324	8-719-800-76	DIODE 1SS226

Rf.NO.	PART NO.	DESCRIPTION	REMARK
D326	8-719-800-76	DIODE 1SS226	
D331	8-719-404-49	DIODE MA111	
D332	8-719-800-76	DIODE 1SS226	
D334	8-719-800-76	DIODE 1SS226	
D336	8-719-800-76	DIODE 1SS226	
D341	8-719-404-49	DIODE MA111	
D501	8-719-421-40	DIODE MA77	
D502	8-719-421-40	DIODE MA77	
D503	8-719-421-40	DIODE MA77	
D504	8-719-421-40	DIODE MA77	
D505	8-719-421-40	DIODE MA77	
D506	8-719-421-40	DIODE MA77	
D508	8-719-800-76	DIODE 1SS226	
D510	8-719-800-76	DIODE 1SS226	
D512	8-719-800-76	DIODE 1SS226	
D514	8-719-800-76	DIODE 1SS226	
D516	8-719-800-76	DIODE 1SS226	
D518	8-719-800-76	DIODE 1SS226	
D520	8-719-421-40	DIODE MA77	
D521	8-719-421-40	DIODE MA77	
D522	8-719-421-40	DIODE MA77	
D523	8-719-421-40	DIODE MA77	
D524	8-719-421-40	DIODE MA77	
D526	8-719-800-76	DIODE 1SS226	
D528	8-719-800-76	DIODE 1SS226	
D530	8-719-800-76	DIODE 1SS226	
D532	8-719-800-76	DIODE 1SS226	
D534	8-719-800-76	DIODE 1SS226	
D536	8-719-800-76	DIODE 1SS226	
D537	8-719-421-40	DIODE MA77	
D538	8-719-421-40	DIODE MA77	
D539	8-719-421-40	DIODE MA77	
D540	8-719-421-40	DIODE MA77	
D541	8-719-421-40	DIODE MA77	
D542	8-719-421-40	DIODE MA77	
D544	8-719-800-76	DIODE 1SS226	
D546	8-719-800-76	DIODE 1SS226	
D548	8-719-800-76	DIODE 1SS226	
D550	8-719-800-76	DIODE 1SS226	
D552	8-719-800-76	DIODE 1SS226	
D554	8-719-800-76	DIODE 1SS226	
D555	8-719-421-40	DIODE MA77	
D777	8-719-158-49	DIODE RD12SB2	
D778	8-719-158-49	DIODE RD12SB2	
D780	8-719-404-49	DIODE MA111	
D781	8-719-404-49	DIODE MA111	
D782	8-719-404-49	DIODE MA111	
D783	8-719-404-49	DIODE MA111	
D1001	8-719-988-62	DIODE 1SS355	
D1002	8-719-988-62	DIODE 1SS355	

<FERRITE BEAD>

FB1	1-414-234-11	INDUCTOR CHIP	0UH
FB2	1-414-234-11	INDUCTOR CHIP	0UH
FB3	1-414-234-11	INDUCTOR CHIP	0UH
FB4	1-414-234-11	INDUCTOR CHIP	0UH
FB5	1-414-234-11	INDUCTOR CHIP	0UH
FB6	1-414-234-11	INDUCTOR CHIP	0UH
FB7	1-414-234-11	INDUCTOR CHIP	0UH

B

Rf.NO.	PART NO.	DESCRIPTION	REMARK
FB8	1-414-234-11	INDUCTOR CHIP	0UH
FB16	1-414-234-11	INDUCTOR CHIP	0UH
FB17	1-414-234-11	INDUCTOR CHIP	0UH
FB18	1-414-234-11	INDUCTOR CHIP	0UH
FB19	1-414-234-11	INDUCTOR CHIP	0UH
FB780	1-414-234-11	INDUCTOR CHIP	0UH
FB781	1-414-234-11	INDUCTOR CHIP	0UH
	<FILTER>		
FL501	1-233-554-11	FILTER, LOW PASS	
FL502	1-233-585-11	FILTER, LOW PASS	
FL503	1-233-584-11	FILTER, LOW PASS	
FL504	1-234-144-11	FILTER, LOW PASS	
FL505	1-233-582-11	FILTER, LOW PASS	
FL506	1-233-581-11	FILTER, LOW PASS	
FL507	1-233-554-11	FILTER, LOW PASS	
FL508	1-233-585-11	FILTER, LOW PASS	
FL509	1-233-584-11	FILTER, LOW PASS	
FL510	1-234-144-11	FILTER, LOW PASS	
FL511	1-233-582-11	FILTER, LOW PASS	
FL512	1-233-581-11	FILTER, LOW PASS	
FL513	1-233-554-11	FILTER, LOW PASS	
FL514	1-233-585-11	FILTER, LOW PASS	
FL515	1-233-584-11	FILTER, LOW PASS	
FL516	1-234-144-11	FILTER, LOW PASS	
FL517	1-233-582-11	FILTER, LOW PASS	
FL518	1-233-581-11	FILTER, LOW PASS	
FL1001	1-239-384-11	FILTER, EMI	
FL1002	1-543-775-11	FERRITE	0UH
FL1003	1-543-775-11	FERRITE	0UH
FL1007	1-414-234-11	INDUCTOR CHIP	0UH
FL1008	1-414-234-11	INDUCTOR CHIP	0UH
FL1009	1-543-775-11	FERRITE	0UH
FL1010	1-543-775-11	FERRITE	0UH
FL1011	1-543-775-11	FERRITE	0UH
FL1012	1-239-847-11	FILTER, LOW PASS	
FL1013	1-239-384-11	FILTER, EMI	
FL1014	1-239-384-11	FILTER, EMI	
FL1015	1-239-847-11	FILTER, LOW PASS	
FL1016	1-239-847-11	FILTER, LOW PASS	
FL1017	1-543-775-11	FERRITE	0UH
	<IC>		
IC100	8-759-175-27	IC TC74VHC574F	
IC101	8-759-196-73	IC UPD485505G-25	
IC102	8-759-196-73	IC UPD485505G-25	
IC103	8-759-179-94	IC HM530281-20	
IC104	8-759-179-94	IC HM530281-20	
IC105	8-759-179-94	IC HM530281-20	
IC106	8-759-179-94	IC HM530281-20	
IC107	8-752-375-92	IC CXD303-105Q	
IC108	8-759-175-27	IC TC74VHC574F	
IC150	8-759-175-27	IC TC74VHC574F	
IC151	8-759-196-73	IC UPD485505G-25	
IC152	8-759-196-73	IC UPD485505G-25	
IC153	8-759-179-94	IC HM530281-20	
IC154	8-759-179-94	IC HM530281-20	
IC155	8-759-179-94	IC HM530281-20	
IC156	8-759-179-94	IC HM530281-20	
IC157	8-752-375-92	IC CXD303-105Q	
IC158	8-759-175-27	IC TC74VHC574F	
IC200	8-759-175-27	IC TC74VHC574F	
IC201	8-759-196-73	IC UPD485505G-25	
IC202	8-759-196-73	IC UPD485505G-25	
IC203	8-759-179-94	IC HM530281-20	
IC204	8-759-179-94	IC HM530281-20	
IC205	8-759-179-94	IC HM530281-20	
IC206	8-759-179-94	IC HM530281-20	
IC207	8-752-375-92	IC CXD303-105Q	
IC208	8-759-175-27	IC TC74VHC574F	
IC250	8-752-377-58	IC CXD3605-114Q	
IC251	8-759-443-13	IC UPD23C8000XGX-304-E2	
IC253	8-759-162-80	IC MM1170BFB	
IC254	8-759-080-93	IC M6M80041FP	
IC255	8-759-080-93	IC M6M80041FP	
IC256	8-759-080-93	IC M6M80041FP	
IC258	8-759-252-59	IC MAX202CSE	
IC259	8-759-032-53	IC MC74HC244AF	
IC260	8-759-032-53	IC MC74HC244AF	
IC261	8-759-032-53	IC MC74HC244AF	
IC262	8-759-032-53	IC MC74HC244AF	
IC263	8-759-032-14	IC MC74HC08AF	
IC264	8-759-362-35	IC ICS9161A-01CW16T	
IC265	8-759-364-06	IC KS6369-20AP	
IC266	8-759-032-32	IC MC74HC132AF	
IC267	8-759-373-60	IC SN74ABT540NS-E05	
IC268	8-759-373-60	IC SN74ABT540NS-E05	
IC269	8-759-925-05	IC LM2903PS	
IC270	8-759-186-39	IC TC74VHC74F	
IC271	8-759-186-51	IC TC74VHC157F	
IC273	8-759-032-53	IC MC74HC244AF	
IC275	8-759-477-25	IC SN74ABT574ANS-E20	
IC276	8-759-477-25	IC SN74ABT574ANS-E20	
IC277	8-759-477-25	IC SN74ABT574ANS-E20	
IC278	8-759-373-60	IC SN74ABT540NS-E05	
IC280	8-759-186-51	IC TC74VHC157F	
IC285	8-759-186-39	IC TC74VHC74F	
IC286	8-759-081-42	IC TC74VHC00F	
IC287	8-759-186-51	IC TC74VHC157F	
IC288	8-759-058-62	IC TC7S08FU(TE85R)	
IC300	8-752-053-21	IC CXA1211M	
IC301	8-752-053-21	IC CXA1211M	
IC302	8-759-011-65	IC MC74HC4053F	
IC303	8-759-011-65	IC MC74HC4053F	
IC304	8-759-635-27	IC M62352GP-75E	
IC305	8-759-288-05	IC TDA4665T-T	
IC306	8-759-082-61	IC TC4W53FU	
IC317	8-759-011-64	IC MC74HC4052F	
IC318	8-759-032-11	IC MC74HC04AF	
IC319	8-759-360-07	IC BA7657F-E2	
IC321	8-759-372-18	IC UPC1830GT-E2	
IC330	8-759-082-61	IC TC4W53FU	
IC331	8-759-082-61	IC TC4W53FU	
IC501	8-759-011-63	IC MC74HC4051F	
IC502	8-759-635-27	IC M62352GP-75E	
IC503	8-759-637-31	IC M52036SP	
IC505	8-752-070-09	IC CXA1779P	
IC508	8-759-925-80	IC SN74HC14ANS	

Rf.NO.	PART NO.	DESCRIPTION	REMARK
IC509	8-759-198-31	IC UPC1093J-1-T	
IC510	8-759-198-31	IC UPC1093J-1-T	
IC511	8-752-371-18	IC CXD2302Q-T4	
IC512	8-752-371-18	IC CXD2302Q-T4	
IC513	8-752-371-18	IC CXD2302Q-T4	
IC514	8-759-008-40	IC MC74HC4078F	
IC515	8-759-008-40	IC MC74HC4078F	
IC516	8-759-008-40	IC MC74HC4078F	
IC517	8-759-032-53	IC MC74HC244AF	
IC521	8-759-082-61	IC TC4W53FU	
IC522	8-759-008-45	IC MC74HC4538F	
IC523	8-759-058-62	IC TC7S08FU(TE85R)	
IC525	8-759-635-27	IC M62362GP-75E	
IC526	8-759-082-61	IC TC4W53FU	
IC527	8-759-082-61	IC TC4W53FU	
IC528	8-759-082-61	IC TC4W53FU	
IC703	8-759-186-63	IC TC74VHC245F	
IC704	8-759-186-63	IC TC74VHC245F	
IC705	8-759-186-63	IC TC74VHC245F	
IC706	8-759-186-63	IC TC74VHC245F	
IC707	8-759-186-63	IC TC74VHC245F	
IC708	8-759-458-24	IC UPD6453GT-664-E2	
IC712	8-759-390-38	IC UPC24M12AHF	
IC713	8-759-144-82	IC UPC2405HF	
IC714	8-759-144-82	IC UPC2405HF	
IC777	8-759-442-20	IC 24LC21AT/SN	
IC780	8-759-032-43	IC MC74HC157AF-T2	
IC1001	8-752-372-78	IC CXD2024AQ	
IC1002	8-759-296-51	IC UPD6486GF-3BA	
IC1003	8-759-161-24	IC UPC659AGS-E2	
IC1004	8-759-167-20	IC UPD42280GU-30	
IC1005	8-759-167-20	IC UPD42280GU-30	
IC1006	8-759-446-66	IC MM1113XFBE	
IC1007	8-759-446-66	IC MM1113XFBE	
IC1008	8-759-011-65	IC MC74HC4053F	
IC1009	8-759-296-53	IC UPC1862GS-E2	
IC1010	8-759-209-57	IC TC4S69F(TE85R)	
IC1011	8-752-053-21	IC CXA1211M	
IC1012	8-759-277-63	IC TC7W14FU(TE12R)	

<COIL>

L302	1-410-193-51	INDUCTOR CHIP	1.2UH
L501	1-410-471-11	INDUCTOR	12UH
L504	1-410-471-11	INDUCTOR	12UH
L506	1-410-471-11	INDUCTOR	12UH
L1001	1-414-042-21	INDUCTOR	18UH
L1006	1-410-193-51	INDUCTOR CHIP	1.2UH
L1007	1-410-193-51	INDUCTOR CHIP	1.2UH
L1008	1-410-193-51	INDUCTOR CHIP	1.2UH
L1009	1-410-193-51	INDUCTOR CHIP	1.2UH
L1010	1-410-193-51	INDUCTOR CHIP	1.2UH
L1011	1-410-193-51	INDUCTOR CHIP	1.2UH
L1012	1-410-193-51	INDUCTOR CHIP	1.2UH
L1013	1-410-193-51	INDUCTOR CHIP	1.2UH
L1014	1-410-193-51	INDUCTOR CHIP	1.2UH
L1015	1-410-193-51	INDUCTOR CHIP	1.2UH
L1016	1-410-193-51	INDUCTOR CHIP	1.2UH
L1017	1-410-204-31	INDUCTOR CHIP	10UH

Rf.NO.	PART NO.	DESCRIPTION	REMARK

<TRANSISTOR>

Q1	8-729-120-28	TRANSISTOR 2SC1623-L5L6	
Q201	8-729-026-49	TRANSISTOR 2SA1037AK-T146-R	
Q215	8-729-027-38	TRANSISTOR DTA144EKA-T146	
Q307	8-729-026-49	TRANSISTOR 2SA1037AK-T146-R	
Q310	8-729-120-28	TRANSISTOR 2SC1623-L5L6	
Q311	8-729-026-49	TRANSISTOR 2SA1037AK-T146-R	
Q313	8-729-120-28	TRANSISTOR 2SC1623-L5L6	
Q314	8-729-120-28	TRANSISTOR 2SC1623-L5L6	
Q315	8-729-120-28	TRANSISTOR 2SC1623-L5L6	
Q316	8-729-120-28	TRANSISTOR 2SC1623-L5L6	
Q317	8-729-120-28	TRANSISTOR 2SC1623-L5L6	
Q318	8-729-120-28	TRANSISTOR 2SC1623-L5L6	
Q320	8-729-120-28	TRANSISTOR 2SC1623-L5L6	
Q321	8-729-120-28	TRANSISTOR 2SC1623-L5L6	
Q322	8-729-120-28	TRANSISTOR 2SC1623-L5L6	
Q323	8-729-120-28	TRANSISTOR 2SC1623-L5L6	
Q324	8-729-120-28	TRANSISTOR 2SC1623-L5L6	
Q325	8-729-026-49	TRANSISTOR 2SA1037AK-T146-R	
Q326	8-729-120-28	TRANSISTOR 2SC1623-L5L6	
Q327	8-729-120-28	TRANSISTOR 2SC1623-L5L6	
Q328	8-729-026-49	TRANSISTOR 2SA1037AK-T146-R	
Q329	8-729-120-28	TRANSISTOR 2SC1623-L5L6	
Q330	8-729-026-49	TRANSISTOR 2SA1037AK-T146-R	
Q351	8-729-026-49	TRANSISTOR 2SA1037AK-T146-R	
Q352	8-729-120-28	TRANSISTOR 2SC1623-L5L6	
Q354	8-729-027-31	TRANSISTOR DTA124EKA-T146	
Q355	8-729-216-22	TRANSISTOR 2SA1162-G	
Q356	8-729-120-28	TRANSISTOR 2SC1623-L5L6	
Q357	8-729-120-28	TRANSISTOR 2SC1623-L5L6	
Q358	1-901-806-11	TRANSISTOR DTC144EKA-T146	
Q501	8-729-120-28	TRANSISTOR 2SC1623-L5L6	
Q502	8-729-120-28	TRANSISTOR 2SC1623-L5L6	
Q503	8-729-120-28	TRANSISTOR 2SC1623-L5L6	
Q504	8-729-120-28	TRANSISTOR 2SC1623-L5L6	
Q505	8-729-120-28	TRANSISTOR 2SC1623-L5L6	
Q506	8-729-120-28	TRANSISTOR 2SC1623-L5L6	
Q507	8-729-027-46	TRANSISTOR DTC114YKA-T146	
Q508	8-729-027-46	TRANSISTOR DTC114YKA-T146	
Q509	8-729-027-46	TRANSISTOR DTC114YKA-T146	
Q510	8-729-027-46	TRANSISTOR DTC114YKA-T146	
Q511	8-729-027-46	TRANSISTOR DTC114YKA-T146	
Q512	8-729-027-46	TRANSISTOR DTC114YKA-T146	
Q513	8-729-026-49	TRANSISTOR 2SA1037AK-T146-R	
Q514	8-729-026-49	TRANSISTOR 2SA1037AK-T146-R	
Q515	8-729-026-49	TRANSISTOR 2SA1037AK-T146-R	
Q516	8-729-026-49	TRANSISTOR 2SA1037AK-T146-R	
Q517	8-729-026-49	TRANSISTOR 2SA1037AK-T146-R	
Q518	8-729-026-49	TRANSISTOR 2SA1037AK-T146-R	
Q519	8-729-120-28	TRANSISTOR 2SC1623-L5L6	
Q520	8-729-120-28	TRANSISTOR 2SC1623-L5L6	
Q521	8-729-120-28	TRANSISTOR 2SC1623-L5L6	
Q522	8-729-120-28	TRANSISTOR 2SC1623-L5L6	
Q523	8-729-120-28	TRANSISTOR 2SC1623-L5L6	
Q524	8-729-120-28	TRANSISTOR 2SC1623-L5L6	
Q525	8-729-027-46	TRANSISTOR DTC114YKA-T146	
Q526	8-729-027-46	TRANSISTOR DTC114YKA-T146	
Q527	8-729-027-46	TRANSISTOR DTC114YKA-T146	
Q528	8-729-027-46	TRANSISTOR DTC114YKA-T146	

B

Rf.NO.	PART NO.	DESCRIPTION	REMARK
Q529	8-729-027-46	TRANSISTOR DTC114YKA-T146	
Q530	8-729-027-46	TRANSISTOR DTC114YKA-T146	
Q531	8-729-120-28	TRANSISTOR 2SC1623-L5L6	
Q532	8-729-120-28	TRANSISTOR 2SC1623-L5L6	
Q533	8-729-120-28	TRANSISTOR 2SC1623-L5L6	
Q534	8-729-120-28	TRANSISTOR 2SC1623-L5L6	
Q535	8-729-120-28	TRANSISTOR 2SC1623-L5L6	
Q536	8-729-120-28	TRANSISTOR 2SC1623-L5L6	
Q537	8-729-120-28	TRANSISTOR 2SC1623-L5L6	
Q538	8-729-120-28	TRANSISTOR 2SC1623-L5L6	
Q539	8-729-120-28	TRANSISTOR 2SC1623-L5L6	
Q540	8-729-120-28	TRANSISTOR 2SC1623-L5L6	
Q541	8-729-120-28	TRANSISTOR 2SC1623-L5L6	
Q542	8-729-120-28	TRANSISTOR 2SC1623-L5L6	
Q543	8-729-027-46	TRANSISTOR DTC114YKA-T146	
Q544	8-729-027-46	TRANSISTOR DTC114YKA-T146	
Q545	8-729-027-46	TRANSISTOR DTC114YKA-T146	
Q546	8-729-027-46	TRANSISTOR DTC114YKA-T146	
Q547	8-729-027-46	TRANSISTOR DTC114YKA-T146	
Q548	8-729-027-46	TRANSISTOR DTC114YKA-T146	
Q549	8-729-026-49	TRANSISTOR 2SA1037AK-T146-R	
Q550	8-729-026-49	TRANSISTOR 2SA1037AK-T146-R	
Q551	8-729-026-49	TRANSISTOR 2SA1037AK-T146-R	
Q552	8-729-026-49	TRANSISTOR 2SA1037AK-T146-R	
Q553	8-729-026-49	TRANSISTOR 2SA1037AK-T146-R	
Q554	8-729-026-49	TRANSISTOR 2SA1037AK-T146-R	
Q555	8-729-120-28	TRANSISTOR 2SC1623-L5L6	
Q556	8-729-120-28	TRANSISTOR 2SC1623-L5L6	
Q557	8-729-120-28	TRANSISTOR 2SC1623-L5L6	
Q558	8-729-120-28	TRANSISTOR 2SC1623-L5L6	
Q559	8-729-120-28	TRANSISTOR 2SC1623-L5L6	
Q560	8-729-120-28	TRANSISTOR 2SC1623-L5L6	
Q561	8-729-027-46	TRANSISTOR DTC114YKA-T146	
Q562	8-729-027-46	TRANSISTOR DTC114YKA-T146	
Q563	8-729-027-46	TRANSISTOR DTC114YKA-T146	
Q564	8-729-027-46	TRANSISTOR DTC114YKA-T146	
Q565	8-729-027-46	TRANSISTOR DTC114YKA-T146	
Q566	8-729-027-46	TRANSISTOR DTC114YKA-T146	
Q567	8-729-120-28	TRANSISTOR 2SC1623-L5L6	
Q568	8-729-120-28	TRANSISTOR 2SC1623-L5L6	
Q569	8-729-120-28	TRANSISTOR 2SC1623-L5L6	
Q570	8-729-120-28	TRANSISTOR 2SC1623-L5L6	
Q571	8-729-120-28	TRANSISTOR 2SC1623-L5L6	
Q572	8-729-120-28	TRANSISTOR 2SC1623-L5L6	
Q573	8-729-026-49	TRANSISTOR 2SA1037AK-T146-R	
Q574	8-729-120-28	TRANSISTOR 2SC1623-L5L6	
Q575	8-729-120-28	TRANSISTOR 2SC1623-L5L6	
Q576	8-729-120-28	TRANSISTOR 2SC1623-L5L6	
Q577	8-729-120-28	TRANSISTOR 2SC1623-L5L6	
Q578	8-729-120-28	TRANSISTOR 2SC1623-L5L6	
Q579	8-729-120-28	TRANSISTOR 2SC1623-L5L6	
Q580	8-729-120-28	TRANSISTOR 2SC1623-L5L6	
Q581	8-729-027-46	TRANSISTOR DTC114YKA-T146	
Q582	8-729-027-46	TRANSISTOR DTC114YKA-T146	
Q583	8-729-027-46	TRANSISTOR DTC114YKA-T146	
Q584	8-729-027-46	TRANSISTOR DTC114YKA-T146	
Q585	8-729-027-46	TRANSISTOR DTC114YKA-T146	
Q586	8-729-027-46	TRANSISTOR DTC114YKA-T146	
Q587	8-729-026-49	TRANSISTOR 2SA1037AK-T146-R	

Rf.NO.	PART NO.	DESCRIPTION	REMARK
Q588	8-729-026-49	TRANSISTOR 2SA1037AK-T146-R	
Q589	8-729-026-49	TRANSISTOR 2SA1037AK-T146-R	
Q590	8-729-026-49	TRANSISTOR 2SA1037AK-T146-R	
Q591	8-729-026-49	TRANSISTOR 2SA1037AK-T146-R	
Q592	8-729-026-49	TRANSISTOR 2SA1037AK-T146-R	
Q593	8-729-026-49	TRANSISTOR 2SA1037AK-T146-R	
Q594	8-729-120-28	TRANSISTOR 2SC1623-L5L6	
Q595	8-729-120-28	TRANSISTOR 2SC1623-L5L6	
Q596	8-729-120-28	TRANSISTOR 2SC1623-L5L6	
Q597	8-729-120-28	TRANSISTOR 2SC1623-L5L6	
Q598	8-729-120-28	TRANSISTOR 2SC1623-L5L6	
Q599	8-729-120-28	TRANSISTOR 2SC1623-L5L6	
Q600	8-729-027-46	TRANSISTOR DTC114YKA-T146	
Q601	8-729-027-46	TRANSISTOR DTC114YKA-T146	
Q602	8-729-027-46	TRANSISTOR DTC114YKA-T146	
Q603	8-729-027-46	TRANSISTOR DTC114YKA-T146	
Q604	8-729-027-46	TRANSISTOR DTC114YKA-T146	
Q605	8-729-027-46	TRANSISTOR DTC114YKA-T146	
Q606	8-729-120-28	TRANSISTOR 2SC1623-L5L6	
Q607	8-729-120-28	TRANSISTOR 2SC1623-L5L6	
Q608	8-729-120-28	TRANSISTOR 2SC1623-L5L6	
Q609	8-729-120-28	TRANSISTOR 2SC1623-L5L6	
Q610	8-729-120-28	TRANSISTOR 2SC1623-L5L6	
Q611	8-729-120-28	TRANSISTOR 2SC1623-L5L6	
Q612	8-729-120-28	TRANSISTOR 2SC1623-L5L6	
Q613	8-729-120-28	TRANSISTOR 2SC1623-L5L6	
Q614	8-729-120-28	TRANSISTOR 2SC1623-L5L6	
Q615	8-729-026-49	TRANSISTOR 2SA1037AK-T146-R	
Q701	8-729-120-28	TRANSISTOR 2SC1623-L5L6	
Q702	1-801-806-11	TRANSISTOR DTC144EKA-T146	
Q1001	8-729-120-28	TRANSISTOR 2SC1623-L5L6	
Q1002	8-729-120-28	TRANSISTOR 2SC1623-L5L6	
Q1003	8-729-026-49	TRANSISTOR 2SA1037AK-T146-R	
Q1004	8-729-026-49	TRANSISTOR 2SA1037AK-T146-R	
Q1005	8-729-120-28	TRANSISTOR 2SC1623-L5L6	
Q1006	8-729-120-28	TRANSISTOR 2SC1623-L5L6	
Q1007	8-729-120-28	TRANSISTOR 2SC1623-L5L6	
Q1008	8-729-120-28	TRANSISTOR 2SC1623-L5L6	
Q1009	8-729-120-28	TRANSISTOR 2SC1623-L5L6	
Q1010	8-729-120-28	TRANSISTOR 2SC1623-L5L6	
Q1011	8-729-120-28	TRANSISTOR 2SC1623-L5L6	
Q1012	8-729-120-28	TRANSISTOR 2SC1623-L5L6	
Q1013	8-729-120-28	TRANSISTOR 2SC1623-L5L6	
Q1014	8-729-120-28	TRANSISTOR 2SC1623-L5L6	
Q1015	8-729-120-28	TRANSISTOR 2SC1623-L5L6	
Q1016	8-729-026-49	TRANSISTOR 2SA1037AK-T146-R	
Q1018	8-729-120-28	TRANSISTOR 2SC1623-L5L6	
Q1019	8-729-120-28	TRANSISTOR 2SC1623-L5L6	
Q1020	8-729-120-28	TRANSISTOR 2SC1623-L5L6	

<RESISTOR>

R8	1-216-073-00	RES,CHIP	10K	5%	1/10W
R9	1-216-073-00	RES,CHIP	10K	5%	1/10W
R10	1-216-073-00	RES,CHIP	10K	5%	1/10W
R20	1-216-049-91	RES,CHIP	1K	5%	1/10W
R21	1-216-089-91	RES,CHIP	47K	5%	1/10W
R22	1-216-025-91	RES,CHIP	100	5%	1/10W

Ref.NO.	PART NO.	DESCRIPTION			REMARK
R26	1-216-073-00	RES,CHIP	10K	5%	1/10W
R41	1-216-055-91	RES,CHIP	4.7K	5%	1/10W
R42	1-216-041-00	RES,CHIP	470	5%	1/10W
R43	1-216-073-00	RES,CHIP	10K	5%	1/10W
R62	1-216-025-91	RES,CHIP	100	5%	1/10W
R68	1-216-025-91	RES,CHIP	100	5%	1/10W
R79	1-216-073-00	RES,CHIP	10K	5%	1/10W
R84	1-216-659-11	METAL CHIP	2.2K	0.50%	1/10W
R89	1-216-013-00	RES,CHIP	33	5%	1/10W
R90	1-216-073-00	RES,CHIP	10K	5%	1/10W
R96	1-216-073-00	RES,CHIP	10K	5%	1/10W
R101	1-216-023-00	RES,CHIP	82	5%	1/10W
R102	1-216-023-00	RES,CHIP	82	5%	1/10W
R103	1-216-021-00	RES,CHIP	68	5%	1/10W
R104	1-216-013-00	RES,CHIP	33	5%	1/10W
R105	1-216-013-00	RES,CHIP	33	5%	1/10W
R106	1-216-021-00	RES,CHIP	68	5%	1/10W
R108	1-216-013-00	RES,CHIP	33	5%	1/10W
R109	1-216-013-00	RES,CHIP	33	5%	1/10W
R110	1-216-017-91	RES,CHIP	47	5%	1/10W
R111	1-216-017-91	RES,CHIP	47	5%	1/10W
R112	1-216-009-00	RES,CHIP	22	5%	1/10W
R113	1-216-013-00	RES,CHIP	33	5%	1/10W
R114	1-216-013-00	RES,CHIP	33	5%	1/10W
R115	1-216-013-00	RES,CHIP	33	5%	1/10W
R116	1-216-013-00	RES,CHIP	33	5%	1/10W
R117	1-216-023-00	RES,CHIP	82	5%	1/10W
R118	1-216-013-00	RES,CHIP	33	5%	1/10W
R119	1-216-013-00	RES,CHIP	33	5%	1/10W
R120	1-216-013-00	RES,CHIP	33	5%	1/10W
R121	1-216-013-00	RES,CHIP	33	5%	1/10W
R122	1-216-023-00	RES,CHIP	82	5%	1/10W
R123	1-216-009-00	RES,CHIP	22	5%	1/10W
R124	1-216-009-00	RES,CHIP	22	5%	1/10W
R125	1-216-009-00	RES,CHIP	22	5%	1/10W
R126	1-216-009-00	RES,CHIP	22	5%	1/10W
R127	1-216-009-00	RES,CHIP	22	5%	1/10W
R128	1-216-009-00	RES,CHIP	22	5%	1/10W
R129	1-216-009-00	RES,CHIP	22	5%	1/10W
R130	1-216-009-00	RES,CHIP	22	5%	1/10W
R132	1-216-023-00	RES,CHIP	82	5%	1/10W
R133	1-216-021-00	RES,CHIP	68	5%	1/10W
R135	1-216-009-00	RES,CHIP	22	5%	1/10W
R136	1-216-009-00	RES,CHIP	22	5%	1/10W
R137	1-216-009-00	RES,CHIP	22	5%	1/10W
R138	1-216-009-00	RES,CHIP	22	5%	1/10W
R139	1-216-009-00	RES,CHIP	22	5%	1/10W
R141	1-216-023-00	RES,CHIP	82	5%	1/10W
R142	1-216-009-00	RES,CHIP	22	5%	1/10W
R143	1-216-009-00	RES,CHIP	22	5%	1/10W
R144	1-216-009-00	RES,CHIP	22	5%	1/10W
R145	1-216-009-00	RES,CHIP	22	5%	1/10W
R146	1-216-009-00	RES,CHIP	22	5%	1/10W
R148	1-216-021-00	RES,CHIP	68	5%	1/10W
R149	1-216-009-00	RES,CHIP	22	5%	1/10W
R150	1-216-009-00	RES,CHIP	22	5%	1/10W
R151	1-216-009-00	RES,CHIP	22	5%	1/10W
R153	1-216-025-91	RES,CHIP	100	5%	1/10W
R154	1-216-009-00	RES,CHIP	22	5%	1/10W

Ref.NO.	PART NO.	DESCRIPTION			REMARK
R156	1-216-021-00	RES,CHIP	68	5%	1/10W
R160	1-216-013-00	RES,CHIP	33	5%	1/10W
R161	1-216-013-00	RES,CHIP	33	5%	1/10W
R162	1-216-013-00	RES,CHIP	33	5%	1/10W
R163	1-216-013-00	RES,CHIP	33	5%	1/10W
R164	1-216-013-00	RES,CHIP	33	5%	1/10W
R165	1-216-013-00	RES,CHIP	33	5%	1/10W
R166	1-216-009-00	RES,CHIP	22	5%	1/10W
R167	1-216-009-00	RES,CHIP	22	5%	1/10W
R168	1-216-009-00	RES,CHIP	22	5%	1/10W
R169	1-216-009-00	RES,CHIP	22	5%	1/10W
R170	1-216-023-00	RES,CHIP	82	5%	1/10W
R171	1-216-023-00	RES,CHIP	82	5%	1/10W
R173	1-216-073-00	RES,CHIP	10K	5%	1/10W
R177	1-216-073-00	RES,CHIP	10K	5%	1/10W
R178	1-216-073-00	RES,CHIP	10K	5%	1/10W
R179	1-216-073-00	RES,CHIP	10K	5%	1/10W
R180	1-216-073-00	RES,CHIP	10K	5%	1/10W
R181	1-216-073-00	RES,CHIP	10K	5%	1/10W
R182	1-216-073-00	RES,CHIP	10K	5%	1/10W
R183	1-216-073-00	RES,CHIP	10K	5%	1/10W
R184	1-216-025-91	RES,CHIP	100	5%	1/10W
R185	1-216-025-91	RES,CHIP	100	5%	1/10W
R186	1-216-025-91	RES,CHIP	100	5%	1/10W
R187	1-216-025-91	RES,CHIP	100	5%	1/10W
R188	1-216-025-91	RES,CHIP	100	5%	1/10W
R189	1-216-025-91	RES,CHIP	100	5%	1/10W
R191	1-216-675-11	METAL CHIP	10K	0.50%	1/10W
R192	1-216-025-91	RES,CHIP	100	5%	1/10W
R193	1-216-025-91	RES,CHIP	100	5%	1/10W
R194	1-216-025-91	RES,CHIP	100	5%	1/10W
R195	1-216-025-91	RES,CHIP	100	5%	1/10W
R196	1-216-025-91	RES,CHIP	100	5%	1/10W
R197	1-216-097-91	RES,CHIP	100K	5%	1/10W
R198	1-216-097-91	RES,CHIP	100K	5%	1/10W
R199	1-216-073-00	RES,CHIP	10K	5%	1/10W
R200	1-216-013-00	RES,CHIP	33	5%	1/10W
R201	1-216-683-11	METAL CHIP	22K	0.50%	1/10W
R202	1-216-049-91	RES,CHIP	1K	5%	1/10W
R203	1-216-685-11	METAL CHIP	27K	0.50%	1/10W
R205	1-216-677-11	METAL CHIP	12K	0.50%	1/10W
R206	1-216-057-00	RES,CHIP	2.2K	5%	1/10W
R207	1-216-049-91	RES,CHIP	1K	5%	1/10W
R208	1-216-699-11	METAL CHIP	100K	0.50%	1/10W
R218	1-216-065-91	RES,CHIP	4.7K	5%	1/10W
R217	1-216-687-11	METAL CHIP	33K	0.50%	1/10W
R218	1-216-679-11	METAL CHIP	15K	0.50%	1/10W
R219	1-216-073-00	RES,CHIP	10K	5%	1/10W
R221	1-216-692-11	METAL CHIP	51K	0.50%	1/10W
R222	1-216-045-00	RES,CHIP	680	5%	1/10W
R223	1-216-057-00	RES,CHIP	2.2K	5%	1/10W
R224	1-216-057-00	RES,CHIP	2.2K	5%	1/10W
R225	1-216-057-00	RES,CHIP	2.2K	5%	1/10W
R226	1-216-679-11	METAL CHIP	15K	0.50%	1/10W
R227	1-216-686-11	METAL CHIP	30K	0.50%	1/10W
R228	1-216-031-00	RES,CHIP	180	5%	1/10W
R229	1-216-685-11	METAL CHIP	27K	0.50%	1/10W
R232	1-216-089-91	RES,CHIP	47K	5%	1/10W
R235	1-216-089-91	RES,CHIP	47K	5%	1/10W
R239	1-216-025-91	RES,CHIP	100	5%	1/10W

B

Rf.NO.	PART NO.	DESCRIPTION			REMARK
R240	1-216-295-91	SHORT	0		
R241	1-216-295-91	SHORT	0		
R242	1-216-295-91	SHORT	0		
R243	1-216-669-11	METAL CHIP	2.4K	0.50%	1/10W
R244	1-216-669-11	METAL CHIP	2.4K	0.50%	1/10W
R245	1-216-037-00	RES,CHIP	330	5%	1/10W
R246	1-216-295-91	SHORT	0		
R247	1-216-675-11	METAL CHIP	10K	0.50%	1/10W
R248	1-216-667-11	METAL CHIP	4.7K	0.50%	1/10W
R249	1-216-675-11	METAL CHIP	10K	0.50%	1/10W
R250	1-216-667-11	METAL CHIP	4.7K	0.50%	1/10W
R251	1-216-675-11	METAL CHIP	10K	0.50%	1/10W
R252	1-216-667-11	METAL CHIP	4.7K	0.50%	1/10W
R253	1-216-037-00	RES,CHIP	330	5%	1/10W
R254	1-216-295-91	SHORT	0		
R257	1-216-660-11	METAL CHIP	2.4K	0.50%	1/10W
R258	1-216-083-00	RES,CHIP	27K	5%	1/10W
R264	1-216-691-11	METAL CHIP	47K	0.50%	1/10W
R265	1-216-639-11	METAL CHIP	330	0.50%	1/10W
R266	1-216-295-91	SHORT	0		
R268	1-216-089-91	RES,CHIP	47K	5%	1/10W
R269	1-216-694-11	METAL CHIP	62K	0.50%	1/10W
R270	1-216-073-00	RES,CHIP	10K	5%	1/10W
R271	1-216-073-00	RES,CHIP	10K	5%	1/10W
R272	1-216-073-00	RES,CHIP	10K	5%	1/10W
R273	1-216-073-00	RES,CHIP	10K	5%	1/10W
R274	1-216-073-00	RES,CHIP	10K	5%	1/10W
R275	1-216-073-00	RES,CHIP	10K	5%	1/10W
R276	1-216-073-00	RES,CHIP	10K	5%	1/10W
R277	1-216-073-00	RES,CHIP	10K	5%	1/10W
R278	1-216-073-00	RES,CHIP	10K	5%	1/10W
R279	1-216-073-00	RES,CHIP	10K	5%	1/10W
R280	1-216-073-00	RES,CHIP	10K	5%	1/10W
R281	1-216-073-00	RES,CHIP	10K	5%	1/10W
R282	1-216-073-00	RES,CHIP	10K	5%	1/10W
R283	1-216-073-00	RES,CHIP	10K	5%	1/10W
R284	1-216-073-00	RES,CHIP	10K	5%	1/10W
R285	1-216-073-00	RES,CHIP	10K	5%	1/10W
R286	1-216-073-00	RES,CHIP	10K	5%	1/10W
R287	1-216-073-00	RES,CHIP	10K	5%	1/10W
R288	1-216-073-00	RES,CHIP	10K	5%	1/10W
R289	1-216-073-00	RES,CHIP	10K	5%	1/10W
R290	1-216-073-00	RES,CHIP	10K	5%	1/10W
R291	1-216-073-00	RES,CHIP	10K	5%	1/10W
R292	1-216-073-00	RES,CHIP	10K	5%	1/10W
R293	1-216-073-00	RES,CHIP	10K	5%	1/10W
R294	1-216-073-00	RES,CHIP	10K	5%	1/10W
R295	1-216-073-00	RES,CHIP	10K	5%	1/10W
R296	1-216-073-00	RES,CHIP	10K	5%	1/10W
R297	1-216-073-00	RES,CHIP	10K	5%	1/10W
R298	1-216-073-00	RES,CHIP	10K	5%	1/10W
R299	1-216-073-00	RES,CHIP	10K	5%	1/10W
R300	1-216-073-00	RES,CHIP	10K	5%	1/10W
R301	1-216-073-00	RES,CHIP	10K	5%	1/10W
R308	1-216-025-91	RES,CHIP	100	5%	1/10W
R309	1-216-025-91	RES,CHIP	100	5%	1/10W
R310	1-216-025-91	RES,CHIP	100	5%	1/10W
R311	1-216-025-91	RES,CHIP	100	5%	1/10W
R312	1-216-653-11	METAL CHIP	1.2K	0.50%	1/10W
R313	1-216-655-11	METAL CHIP	1.5K	0.50%	1/10W

Rf.NO.	PART NO.	DESCRIPTION			REMARK
R314	1-216-089-91	RES,CHIP	47K	5%	1/10W
R315	1-216-667-11	METAL CHIP	4.7K	0.50%	1/10W
R316	1-216-661-11	METAL CHIP	2.7K	0.50%	1/10W
R317	1-216-663-11	METAL CHIP	3.3K	0.50%	1/10W
R318	1-216-663-11	METAL CHIP	3.3K	0.50%	1/10W
R319	1-216-049-91	RES,CHIP	1K	5%	1/10W
R320	1-216-631-11	METAL CHIP	150	0.50%	1/10W
R321	1-216-627-11	METAL CHIP	100	0.50%	1/10W
R322	1-216-653-11	METAL CHIP	1.2K	0.50%	1/10W
R323	1-216-659-11	METAL CHIP	2.2K	0.50%	1/10W
R324	1-216-089-91	RES,CHIP	47K	5%	1/10W
R335	1-216-097-91	RES,CHIP	100K	5%	1/10W
R336	1-216-099-00	RES,CHIP	120K	5%	1/10W
R346	1-216-663-11	METAL CHIP	3.3K	0.50%	1/10W
R347	1-216-657-11	METAL CHIP	1.8K	0.50%	1/10W
R348	1-216-295-91	SHORT	0		
R350	1-216-675-11	METAL CHIP	10K	0.50%	1/10W
R352	1-216-295-91	SHORT	0		
R353	1-216-675-11	METAL CHIP	10K	0.50%	1/10W
R354	1-216-045-00	RES,CHIP	680	5%	1/10W
R355	1-216-053-00	RES,CHIP	1.5K	5%	1/10W
R356	1-216-047-91	RES,CHIP	820	5%	1/10W
R357	1-216-025-91	RES,CHIP	100	5%	1/10W
R358	1-216-049-91	RES,CHIP	1K	5%	1/10W
R359	1-216-073-00	RES,CHIP	10K	5%	1/10W
R361	1-216-687-11	METAL CHIP	33K	0.50%	1/10W
R362	1-216-681-11	METAL CHIP	18K	0.50%	1/10W
R363	1-216-681-11	METAL CHIP	18K	0.50%	1/10W
R364	1-216-687-11	METAL CHIP	33K	0.50%	1/10W
R365	1-216-033-00	RES,CHIP	220	5%	1/10W
R366	1-216-295-91	SHORT	0		
R367	1-216-295-91	SHORT	0		
R368	1-216-295-91	SHORT	0		
R369	1-216-651-11	METAL CHIP	1K	0.50%	1/10W
R370	1-216-651-11	METAL CHIP	1K	0.50%	1/10W
R371	1-216-651-11	METAL CHIP	1K	0.50%	1/10W
R372	1-216-659-11	METAL CHIP	2.2K	0.50%	1/10W
R373	1-216-690-11	METAL CHIP	43K	0.50%	1/10W
R375	1-216-639-11	METAL CHIP	330	0.50%	1/10W
R376	1-218-756-11	METAL CHIP	150K	0.50%	1/10W
R378	1-216-661-11	METAL CHIP	2.7K	0.50%	1/10W
R379	1-216-667-11	METAL CHIP	4.7K	0.50%	1/10W
R380	1-216-643-11	METAL CHIP	470	0.50%	1/10W
R383	1-218-772-11	METAL CHIP	680K	0.50%	1/10W
R384	1-216-679-11	METAL CHIP	15K	0.50%	1/10W
R385	1-216-646-11	METAL CHIP	620	0.50%	1/10W
R387	1-216-121-91	RES,CHIP	1M	5%	1/10W
R388	1-216-121-91	RES,CHIP	1M	5%	1/10W
R389	1-216-121-91	RES,CHIP	1M	5%	1/10W
R392	1-216-657-11	METAL CHIP	1.8K	0.50%	1/10W
R393	1-218-775-11	METAL CHIP	910K	0.50%	1/10W
R394	1-216-687-11	METAL CHIP	33K	0.50%	1/10W
R395	1-216-069-00	RES,CHIP	6.8K	5%	1/10W
R396	1-216-651-11	METAL CHIP	1K	0.50%	1/10W
R399	1-216-651-11	METAL CHIP	1K	0.50%	1/10W
R400	1-216-651-11	METAL CHIP	1K	0.50%	1/10W
R401	1-218-774-11	METAL CHIP	820K	0.50%	1/10W
R402	1-218-766-11	METAL CHIP	390K	0.50%	1/10W
R403	1-218-774-11	METAL CHIP	820K	0.50%	1/10W
R404	1-216-681-11	METAL CHIP	18K	0.50%	1/10W

Rf.NO.	PART NO.	DESCRIPTION			REMARK
R405	1-216-683-11	METAL CHIP	22K	0.50%	1/10W
R406	1-216-681-11	METAL CHIP	18K	0.50%	1/10W
R407	1-216-683-11	METAL CHIP	22K	0.50%	1/10W
R408	1-216-681-11	METAL CHIP	18K	0.50%	1/10W
R409	1-216-683-11	METAL CHIP	22K	0.50%	1/10W
R411	1-216-645-11	METAL CHIP	560	0.50%	1/10W
R412	1-216-645-11	METAL CHIP	560	0.50%	1/10W
R413	1-216-645-11	METAL CHIP	560	0.50%	1/10W
R414	1-216-651-11	METAL CHIP	1K	0.50%	1/10W
R415	1-216-651-11	METAL CHIP	1K	0.50%	1/10W
R416	1-216-652-11	METAL CHIP	1.1K	0.50%	1/10W
R417	1-216-652-11	METAL CHIP	1.1K	0.50%	1/10W
R420	1-216-687-11	METAL CHIP	33K	0.50%	1/10W
R421	1-216-687-11	METAL CHIP	33K	0.50%	1/10W
R422	1-216-695-11	METAL CHIP	68K	0.50%	1/10W
R423	1-216-633-11	METAL CHIP	180	0.50%	1/10W
R424	1-216-089-91	RES,CHIP	47K	5%	1/10W
R425	1-216-675-11	METAL CHIP	10K	0.50%	1/10W
R426	1-216-676-11	METAL CHIP	11K	0.50%	1/10W
R427	1-216-065-91	RES,CHIP	4.7K	5%	1/10W
R428	1-216-025-91	RES,CHIP	100	5%	1/10W
R436	1-216-651-11	METAL CHIP	1K	0.50%	1/10W
R437	1-216-651-11	METAL CHIP	1K	0.50%	1/10W
R438	1-216-651-11	METAL CHIP	1K	0.50%	1/10W
R440	1-216-073-00	RES,CHIP	10K	5%	1/10W
R441	1-216-073-00	RES,CHIP	10K	5%	1/10W
R442	1-216-073-00	RES,CHIP	10K	5%	1/10W
R443	1-216-073-00	RES,CHIP	10K	5%	1/10W
R444	1-216-073-00	RES,CHIP	10K	5%	1/10W
R445	1-216-073-00	RES,CHIP	10K	5%	1/10W
R446	1-216-073-00	RES,CHIP	10K	5%	1/10W
R447	1-216-073-00	RES,CHIP	10K	5%	1/10W
R448	1-216-073-00	RES,CHIP	10K	5%	1/10W
R449	1-216-073-00	RES,CHIP	10K	5%	1/10W
R450	1-216-073-00	RES,CHIP	10K	5%	1/10W
R451	1-216-073-00	RES,CHIP	10K	5%	1/10W
R452	1-216-073-00	RES,CHIP	10K	5%	1/10W
R453	1-216-073-00	RES,CHIP	10K	5%	1/10W
R454	1-216-073-00	RES,CHIP	10K	5%	1/10W
R455	1-216-073-00	RES,CHIP	10K	5%	1/10W
R456	1-216-073-00	RES,CHIP	10K	5%	1/10W
R457	1-216-073-00	RES,CHIP	10K	5%	1/10W
R458	1-216-073-00	RES,CHIP	10K	5%	1/10W
R459	1-216-073-00	RES,CHIP	10K	5%	1/10W
R460	1-216-073-00	RES,CHIP	10K	5%	1/10W
R461	1-216-073-00	RES,CHIP	10K	5%	1/10W
R462	1-216-073-00	RES,CHIP	10K	5%	1/10W
R463	1-216-073-00	RES,CHIP	10K	5%	1/10W
R464	1-216-073-00	RES,CHIP	10K	5%	1/10W
R465	1-216-073-00	RES,CHIP	10K	5%	1/10W
R466	1-216-073-00	RES,CHIP	10K	5%	1/10W
R467	1-216-073-00	RES,CHIP	10K	5%	1/10W
R468	1-216-073-00	RES,CHIP	10K	5%	1/10W
R469	1-216-073-00	RES,CHIP	10K	5%	1/10W
R470	1-216-073-00	RES,CHIP	10K	5%	1/10W
R471	1-216-073-00	RES,CHIP	10K	5%	1/10W
R477	1-216-013-00	RES,CHIP	33	5%	1/8W
R478	1-216-013-00	RES,CHIP	33	5%	1/10W
R479	1-216-013-00	RES,CHIP	33	5%	1/10W
R480	1-216-013-00	RES,CHIP	33	5%	1/10W

Rf.NO.	PART NO.	DESCRIPTION			REMARK
R481	1-216-013-00	RES,CHIP	33	5%	1/10W
R482	1-216-013-00	RES,CHIP	33	5%	1/10W
R483	1-216-013-00	RES,CHIP	33	5%	1/10W
R484	1-216-013-00	RES,CHIP	33	5%	1/10W
R485	1-216-013-00	RES,CHIP	33	5%	1/10W
R486	1-216-013-00	RES,CHIP	33	5%	1/10W
R487	1-216-013-00	RES,CHIP	33	5%	1/10W
R488	1-216-013-00	RES,CHIP	33	5%	1/10W
R489	1-216-013-00	RES,CHIP	33	5%	1/10W
R490	1-216-013-00	RES,CHIP	33	5%	1/10W
R491	1-216-013-00	RES,CHIP	33	5%	1/10W
R492	1-216-013-00	RES,CHIP	33	5%	1/10W
R493	1-216-013-00	RES,CHIP	33	5%	1/10W
R494	1-216-013-00	RES,CHIP	33	5%	1/10W
R495	1-216-013-00	RES,CHIP	33	5%	1/10W
R496	1-216-013-00	RES,CHIP	33	5%	1/10W
R497	1-216-013-00	RES,CHIP	33	5%	1/10W
R498	1-216-013-00	RES,CHIP	33	5%	1/10W
R499	1-216-013-00	RES,CHIP	33	5%	1/10W
R500	1-216-013-00	RES,CHIP	33	5%	1/10W
R501	1-216-675-11	METAL CHIP	10K	0.50%	1/10W
R502	1-216-675-11	METAL CHIP	10K	0.50%	1/10W
R503	1-216-675-11	METAL CHIP	10K	0.50%	1/10W
R504	1-216-675-11	METAL CHIP	10K	0.50%	1/10W
R505	1-216-675-11	METAL CHIP	10K	0.50%	1/10W
R506	1-216-675-11	METAL CHIP	10K	0.50%	1/10W
R507	1-216-639-11	METAL CHIP	330	0.50%	1/10W
R508	1-216-639-11	METAL CHIP	330	0.50%	1/10W
R509	1-216-639-11	METAL CHIP	330	0.50%	1/10W
R510	1-216-639-11	METAL CHIP	330	0.50%	1/10W
R511	1-216-639-11	METAL CHIP	330	0.50%	1/10W
R512	1-216-639-11	METAL CHIP	330	0.50%	1/10W
R513	1-216-657-11	METAL CHIP	1.8K	0.50%	1/10W
R514	1-216-658-11	METAL CHIP	2K	0.50%	1/10W
R515	1-216-659-11	METAL CHIP	2.2K	0.50%	1/10W
R516	1-216-659-11	METAL CHIP	2.2K	0.50%	1/10W
R517	1-216-659-11	METAL CHIP	2.2K	0.50%	1/10W
R518	1-216-659-11	METAL CHIP	2.2K	0.50%	1/10W
R519	1-216-639-11	METAL CHIP	330	0.50%	1/10W
R520	1-216-639-11	METAL CHIP	330	0.50%	1/10W
R521	1-216-639-11	METAL CHIP	330	0.50%	1/10W
R522	1-216-639-11	METAL CHIP	330	0.50%	1/10W
R523	1-216-639-11	METAL CHIP	330	0.50%	1/10W
R524	1-216-639-11	METAL CHIP	330	0.50%	1/10W
R525	1-216-641-11	METAL CHIP	390	0.50%	1/10W
R526	1-216-641-11	METAL CHIP	390	0.50%	1/10W
R527	1-216-641-11	METAL CHIP	390	0.50%	1/10W
R528	1-216-641-11	METAL CHIP	390	0.50%	1/10W
R529	1-216-641-11	METAL CHIP	390	0.50%	1/10W
R530	1-216-641-11	METAL CHIP	390	0.50%	1/10W
R531	1-216-675-11	METAL CHIP	10K	0.50%	1/10W
R532	1-216-667-11	METAL CHIP	4.7K	0.50%	1/10W
R533	1-216-675-11	METAL CHIP	10K	0.50%	1/10W
R534	1-216-667-11	METAL CHIP	4.7K	0.50%	1/10W
R535	1-216-675-11	METAL CHIP	10K	0.50%	1/10W
R536	1-216-667-11	METAL CHIP	4.7K	0.50%	1/10W
R537	1-216-675-11	METAL CHIP	10K	0.50%	1/10W
R538	1-216-667-11	METAL CHIP	4.7K	0.50%	1/10W
R539	1-216-675-11	METAL CHIP	10K	0.50%	1/10W
R540	1-216-667-11	METAL CHIP	4.7K	0.50%	1/10W

Rf.NO.	PART NO.	DESCRIPTION			REMARK
R541	1-216-675-11	METAL CHIP	10K	0.50%	1/10W
R542	1-216-667-11	METAL CHIP	4.7K	0.50%	1/10W
R543	1-216-675-11	METAL CHIP	10K	0.50%	1/10W
R544	1-216-675-11	METAL CHIP	10K	0.50%	1/10W
R545	1-216-675-11	METAL CHIP	10K	0.50%	1/10W
R546	1-216-675-11	METAL CHIP	10K	0.50%	1/10W
R547	1-216-675-11	METAL CHIP	10K	0.50%	1/10W
R548	1-216-675-11	METAL CHIP	10K	0.50%	1/10W
R549	1-216-675-11	METAL CHIP	10K	0.50%	1/10W
R550	1-216-073-00	RES,CHIP	10K	5%	1/10W
R551	1-216-073-00	RES,CHIP	10K	5%	1/10W
R552	1-216-073-00	RES,CHIP	10K	5%	1/10W
R553	1-216-073-00	RES,CHIP	10K	5%	1/10W
R554	1-216-073-00	RES,CHIP	10K	5%	1/10W
R555	1-216-639-11	METAL CHIP	330	0.50%	1/10W
R561	1-216-675-11	METAL CHIP	10K	0.50%	1/10W
R562	1-216-675-11	METAL CHIP	10K	0.50%	1/10W
R563	1-216-675-11	METAL CHIP	10K	0.50%	1/10W
R564	1-216-675-11	METAL CHIP	10K	0.50%	1/10W
R565	1-216-675-11	METAL CHIP	10K	0.50%	1/10W
R566	1-216-675-11	METAL CHIP	10K	0.50%	1/10W
R567	1-216-639-11	METAL CHIP	330	0.50%	1/10W
R568	1-216-639-11	METAL CHIP	330	0.50%	1/10W
R569	1-216-639-11	METAL CHIP	330	0.50%	1/10W
R570	1-216-639-11	METAL CHIP	330	0.50%	1/10W
R571	1-216-639-11	METAL CHIP	330	0.50%	1/10W
R572	1-216-639-11	METAL CHIP	330	0.50%	1/10W
R573	1-216-657-11	METAL CHIP	1.8K	0.50%	1/10W
R574	1-216-658-11	METAL CHIP	2K	0.50%	1/10W
R575	1-216-659-11	METAL CHIP	2.2K	0.50%	1/10W
R576	1-216-659-11	METAL CHIP	2.2K	0.50%	1/10W
R577	1-216-659-11	METAL CHIP	2.2K	0.50%	1/10W
R578	1-216-659-11	METAL CHIP	2.2K	0.50%	1/10W
R579	1-216-639-11	METAL CHIP	330	0.50%	1/10W
R580	1-216-639-11	METAL CHIP	330	0.50%	1/10W
R581	1-216-639-11	METAL CHIP	330	0.50%	1/10W
R582	1-216-639-11	METAL CHIP	330	0.50%	1/10W
R583	1-216-639-11	METAL CHIP	330	0.50%	1/10W
R584	1-216-639-11	METAL CHIP	330	0.50%	1/10W
R585	1-216-641-11	METAL CHIP	390	0.50%	1/10W
R586	1-216-641-11	METAL CHIP	390	0.50%	1/10W
R587	1-216-641-11	METAL CHIP	390	0.50%	1/10W
R588	1-216-641-11	METAL CHIP	390	0.50%	1/10W
R589	1-216-641-11	METAL CHIP	390	0.50%	1/10W
R590	1-216-641-11	METAL CHIP	390	0.50%	1/10W
R591	1-216-675-11	METAL CHIP	10K	0.50%	1/10W
R592	1-216-667-11	METAL CHIP	4.7K	0.50%	1/10W
R593	1-216-675-11	METAL CHIP	10K	0.50%	1/10W
R594	1-216-667-11	METAL CHIP	4.7K	0.50%	1/10W
R595	1-216-675-11	METAL CHIP	10K	0.50%	1/10W
R596	1-216-667-11	METAL CHIP	4.7K	0.50%	1/10W
R597	1-216-675-11	METAL CHIP	10K	0.50%	1/10W
R598	1-216-667-11	METAL CHIP	4.7K	0.50%	1/10W
R599	1-216-675-11	METAL CHIP	10K	0.50%	1/10W
R600	1-216-667-11	METAL CHIP	4.7K	0.50%	1/10W
R601	1-216-675-11	METAL CHIP	10K	0.50%	1/10W
R602	1-216-667-11	METAL CHIP	4.7K	0.50%	1/10W
R603	1-216-675-11	METAL CHIP	10K	0.50%	1/10W
R604	1-216-675-11	METAL CHIP	10K	0.50%	1/10W
R605	1-216-675-11	METAL CHIP	10K	0.50%	1/10W

Rf.NO.	PART NO.	DESCRIPTION			REMARK
R606	1-216-675-11	METAL CHIP	10K	0.50%	1/10W
R607	1-216-675-11	METAL CHIP	10K	0.50%	1/10W
R608	1-216-675-11	METAL CHIP	10K	0.50%	1/10W
R609	1-216-639-11	METAL CHIP	330	0.50%	1/10W
R611	1-216-646-11	METAL CHIP	620	0.50%	1/10W
R612	1-216-655-11	METAL CHIP	1.5K	0.50%	1/10W
R613	1-216-649-11	METAL CHIP	820	0.50%	1/10W
R614	1-216-651-11	METAL CHIP	1K	0.50%	1/10W
R615	1-216-651-11	METAL CHIP	1K	0.50%	1/10W
R616	1-216-675-11	METAL CHIP	10K	0.50%	1/10W
R617	1-216-675-11	METAL CHIP	10K	0.50%	1/10W
R618	1-216-675-11	METAL CHIP	10K	0.50%	1/10W
R619	1-216-675-11	METAL CHIP	10K	0.50%	1/10W
R620	1-216-675-11	METAL CHIP	10K	0.50%	1/10W
R621	1-216-675-11	METAL CHIP	10K	0.50%	1/10W
R622	1-216-675-11	METAL CHIP	10K	0.50%	1/10W
R623	1-216-659-11	METAL CHIP	2.2K	0.50%	1/10W
R624	1-216-639-11	METAL CHIP	330	0.50%	1/10W
R625	1-216-639-11	METAL CHIP	330	0.50%	1/10W
R626	1-216-639-11	METAL CHIP	330	0.50%	1/10W
R627	1-216-639-11	METAL CHIP	330	0.50%	1/10W
R628	1-216-639-11	METAL CHIP	330	0.50%	1/10W
R629	1-216-639-11	METAL CHIP	330	0.50%	1/10W
R630	1-216-651-11	METAL CHIP	1K	0.50%	1/10W
R632	1-216-657-11	METAL CHIP	1.8K	0.50%	1/10W
R633	1-216-658-11	METAL CHIP	2K	0.50%	1/10W
R634	1-216-659-11	METAL CHIP	2.2K	0.50%	1/10W
R635	1-216-659-11	METAL CHIP	2.2K	0.50%	1/10W
R636	1-216-659-11	METAL CHIP	2.2K	0.50%	1/10W
R637	1-216-659-11	METAL CHIP	2.2K	0.50%	1/10W
R638	1-216-639-11	METAL CHIP	330	0.50%	1/10W
R639	1-216-639-11	METAL CHIP	330	0.50%	1/10W
R640	1-216-639-11	METAL CHIP	330	0.50%	1/10W
R641	1-216-639-11	METAL CHIP	330	0.50%	1/10W
R642	1-216-639-11	METAL CHIP	330	0.50%	1/10W
R643	1-216-639-11	METAL CHIP	330	0.50%	1/10W
R645	1-216-641-11	METAL CHIP	390	0.50%	1/10W
R646	1-216-641-11	METAL CHIP	390	0.50%	1/10W
R647	1-216-641-11	METAL CHIP	390	0.50%	1/10W
R648	1-216-641-11	METAL CHIP	390	0.50%	1/10W
R649	1-216-641-11	METAL CHIP	390	0.50%	1/10W
R650	1-216-641-11	METAL CHIP	390	0.50%	1/10W
R651	1-216-675-11	METAL CHIP	10K	0.50%	1/10W
R652	1-216-667-11	METAL CHIP	4.7K	0.50%	1/10W
R653	1-216-675-11	METAL CHIP	10K	0.50%	1/10W
R654	1-216-667-11	METAL CHIP	4.7K	0.50%	1/10W
R655	1-216-675-11	METAL CHIP	10K	0.50%	1/10W
R656	1-216-667-11	METAL CHIP	4.7K	0.50%	1/10W
R657	1-216-675-11	METAL CHIP	10K	0.50%	1/10W
R658	1-216-667-11	METAL CHIP	4.7K	0.50%	1/10W
R659	1-216-675-11	METAL CHIP	10K	0.50%	1/10W
R660	1-216-667-11	METAL CHIP	4.7K	0.50%	1/10W
R661	1-216-675-11	METAL CHIP	10K	0.50%	1/10W
R662	1-216-667-11	METAL CHIP	4.7K	0.50%	1/10W
R663	1-216-675-11	METAL CHIP	10K	0.50%	1/10W
R664	1-216-675-11	METAL CHIP	10K	0.50%	1/10W
R665	1-216-675-11	METAL CHIP	10K	0.50%	1/10W
R666	1-216-675-11	METAL CHIP	10K	0.50%	1/10W
R667	1-216-675-11	METAL CHIP	10K	0.50%	1/10W
R668	1-216-675-11	METAL CHIP	10K	0.50%	1/10W

Rf.NO.	PART NO.	DESCRIPTION			REMARK
R669	1-216-639-11	METAL CHIP	330	0.50%	1/10W
R701	1-216-017-91	RES,CHIP	47	5%	1/10W
R702	1-216-017-91	RES,CHIP	47	5%	1/10W
R703	1-216-017-91	RES,CHIP	47	5%	1/10W
R704	1-216-017-91	RES,CHIP	47	5%	1/10W
R705	1-216-017-91	RES,CHIP	47	5%	1/10W
R706	1-216-017-91	RES,CHIP	47	5%	1/10W
R707	1-216-017-91	RES,CHIP	47	5%	1/10W
R708	1-216-017-91	RES,CHIP	47	5%	1/10W
R709	1-216-017-91	RES,CHIP	47	5%	1/10W
R710	1-216-017-91	RES,CHIP	47	5%	1/10W
R711	1-216-017-91	RES,CHIP	47	5%	1/10W
R712	1-216-017-91	RES,CHIP	47	5%	1/10W
R713	1-216-017-91	RES,CHIP	47	5%	1/10W
R714	1-216-017-91	RES,CHIP	47	5%	1/10W
R715	1-216-017-91	RES,CHIP	47	5%	1/10W
R716	1-216-017-91	RES,CHIP	47	5%	1/10W
R717	1-216-017-91	RES,CHIP	47	5%	1/10W
R718	1-216-017-91	RES,CHIP	47	5%	1/10W
R719	1-216-017-91	RES,CHIP	47	5%	1/10W
R720	1-216-017-91	RES,CHIP	47	5%	1/10W
R721	1-216-017-91	RES,CHIP	47	5%	1/10W
R722	1-216-017-91	RES,CHIP	47	5%	1/10W
R723	1-216-017-91	RES,CHIP	47	5%	1/10W
R724	1-216-017-91	RES,CHIP	47	5%	1/10W
R725	1-216-053-00	RES,CHIP	1.5K	5%	1/10W
R726	1-216-053-00	RES,CHIP	1.5K	5%	1/10W
R727	1-216-053-00	RES,CHIP	1.5K	5%	1/10W
R728	1-216-053-00	RES,CHIP	1.5K	5%	1/10W
R729	1-216-053-00	RES,CHIP	1.5K	5%	1/10W
R730	1-216-053-00	RES,CHIP	1.5K	5%	1/10W
R731	1-216-053-00	RES,CHIP	1.5K	5%	1/10W
R732	1-216-053-00	RES,CHIP	1.5K	5%	1/10W
R733	1-216-053-00	RES,CHIP	1.5K	5%	1/10W
R734	1-216-053-00	RES,CHIP	1.5K	5%	1/10W
R735	1-216-053-00	RES,CHIP	1.5K	5%	1/10W
R736	1-216-053-00	RES,CHIP	1.5K	5%	1/10W
R737	1-216-053-00	RES,CHIP	1.5K	5%	1/10W
R738	1-216-053-00	RES,CHIP	1.5K	5%	1/10W
R739	1-216-053-00	RES,CHIP	1.5K	5%	1/10W
R740	1-216-053-00	RES,CHIP	1.5K	5%	1/10W
R741	1-216-053-00	RES,CHIP	1.5K	5%	1/10W
R742	1-216-053-00	RES,CHIP	1.5K	5%	1/10W
R743	1-216-053-00	RES,CHIP	1.5K	5%	1/10W
R744	1-216-053-00	RES,CHIP	1.5K	5%	1/10W
R745	1-216-053-00	RES,CHIP	1.5K	5%	1/10W
R746	1-216-053-00	RES,CHIP	1.5K	5%	1/10W
R747	1-216-053-00	RES,CHIP	1.5K	5%	1/10W
R748	1-216-053-00	RES,CHIP	1.5K	5%	1/10W
R749	1-216-053-00	RES,CHIP	1.5K	5%	1/10W
R750	1-216-053-00	RES,CHIP	1.5K	5%	1/10W
R751	1-216-053-00	RES,CHIP	1.5K	5%	1/10W
R752	1-216-053-00	RES,CHIP	1.5K	5%	1/10W
R753	1-216-053-00	RES,CHIP	1.5K	5%	1/10W
R754	1-216-073-00	RES,CHIP	10K	5%	1/10W
R755	1-216-049-91	RES,CHIP	1K	5%	1/10W
R756	1-216-049-91	RES,CHIP	1K	5%	1/10W
R757	1-216-033-00	RES,CHIP	220	5%	1/10W
R758	1-216-033-00	RES,CHIP	220	5%	1/10W
R759	1-216-045-00	RES,CHIP	680	5%	1/10W

Rf.NO.	PART NO.	DESCRIPTION			REMARK
R760	1-216-049-91	RES,CHIP	1K	5%	1/10W
R761	1-216-017-91	RES,CHIP	47	5%	1/10W
R762	1-216-009-00	RES,CHIP	22	5%	1/10W
R777	1-216-089-91	RES,CHIP	47K	5%	1/10W
R778	1-216-017-91	RES,CHIP	47	5%	1/10W
R779	1-216-017-91	RES,CHIP	47	5%	1/10W
R780	1-216-017-91	RES,CHIP	47	5%	1/10W
R781	1-216-073-00	RES,CHIP	10K	5%	1/10W
R801	1-216-009-00	RES,CHIP	22	5%	1/10W
R802	1-216-009-00	RES,CHIP	22	5%	1/10W
R803	1-216-009-00	RES,CHIP	22	5%	1/10W
R804	1-216-009-00	RES,CHIP	22	5%	1/10W
R805	1-216-009-00	RES,CHIP	22	5%	1/10W
R806	1-216-009-00	RES,CHIP	22	5%	1/10W
R807	1-216-009-00	RES,CHIP	22	5%	1/10W
R808	1-216-009-00	RES,CHIP	22	5%	1/10W
R809	1-216-009-00	RES,CHIP	22	5%	1/10W
R810	1-216-009-00	RES,CHIP	22	5%	1/10W
R811	1-216-009-00	RES,CHIP	22	5%	1/10W
R812	1-216-009-00	RES,CHIP	22	5%	1/10W
R813	1-216-009-00	RES,CHIP	22	5%	1/10W
R814	1-216-009-00	RES,CHIP	22	5%	1/10W
R815	1-216-009-00	RES,CHIP	22	5%	1/10W
R816	1-216-009-00	RES,CHIP	22	5%	1/10W
R817	1-216-009-00	RES,CHIP	22	5%	1/10W
R818	1-216-009-00	RES,CHIP	22	5%	1/10W
R819	1-216-009-00	RES,CHIP	22	5%	1/10W
R820	1-216-009-00	RES,CHIP	22	5%	1/10W
R821	1-216-009-00	RES,CHIP	22	5%	1/10W
R822	1-216-009-00	RES,CHIP	22	5%	1/10W
R823	1-216-009-00	RES,CHIP	22	5%	1/10W
R824	1-216-009-00	RES,CHIP	22	5%	1/10W
R825	1-216-009-00	RES,CHIP	22	5%	1/10W
R826	1-216-009-00	RES,CHIP	22	5%	1/10W
R827	1-216-009-00	RES,CHIP	22	5%	1/10W
R828	1-216-009-00	RES,CHIP	22	5%	1/10W
R829	1-216-025-91	RES,CHIP	100	5%	1/10W
R830	1-216-057-00	RES,CHIP	2.2K	5%	1/10W
R831	1-216-079-00	RES,CHIP	18K	5%	1/10W
R832	1-216-079-00	RES,CHIP	18K	5%	1/10W
R833	1-216-049-91	RES,CHIP	1K	5%	1/10W
R834	1-216-057-00	RES,CHIP	5.6K	5%	1/10W
R835	1-216-073-00	RES,CHIP	10K	5%	1/10W
R836	1-216-045-00	RES,CHIP	680	5%	1/10W
R837	1-216-045-00	RES,CHIP	680	5%	1/10W
R838	1-216-045-00	RES,CHIP	680	5%	1/10W
R839	1-216-045-00	RES,CHIP	680	5%	1/10W
R840	1-216-045-00	RES,CHIP	680	5%	1/10W
R841	1-216-045-00	RES,CHIP	680	5%	1/10W
R842	1-216-045-00	RES,CHIP	680	5%	1/10W
R843	1-216-045-00	RES,CHIP	680	5%	1/10W
R844	1-216-045-00	RES,CHIP	680	5%	1/10W
R845	1-216-045-00	RES,CHIP	680	5%	1/10W
R846	1-216-045-00	RES,CHIP	680	5%	1/10W
R847	1-216-045-00	RES,CHIP	680	5%	1/10W
R848	1-216-045-00	RES,CHIP	680	5%	1/10W
R849	1-216-045-00	RES,CHIP	680	5%	1/10W
R850	1-216-045-00	RES,CHIP	680	5%	1/10W
R851	1-216-045-00	RES,CHIP	680	5%	1/10W
R852	1-216-045-00	RES,CHIP	680	5%	1/10W

B

Ri.NO.	PART NO.	DESCRIPTION			REMARK
R853	1-216-045-00	RES,CHIP	680	5%	1/10W
R854	1-216-045-00	RES,CHIP	680	5%	1/10W
R855	1-216-045-00	RES,CHIP	680	5%	1/10W
R856	1-216-045-00	RES,CHIP	680	5%	1/10W
R857	1-216-045-00	RES,CHIP	680	5%	1/10W
R858	1-216-045-00	RES,CHIP	680	5%	1/10W
R859	1-216-045-00	RES,CHIP	680	5%	1/10W
R860	1-216-045-00	RES,CHIP	680	5%	1/10W
R861	1-216-045-00	RES,CHIP	680	5%	1/10W
R862	1-216-045-00	RES,CHIP	680	5%	1/10W
R863	1-216-045-00	RES,CHIP	680	5%	1/10W
R871	1-216-341-11	METAL OXIDE	0.22	5%	1W F
R872	1-216-341-11	METAL OXIDE	0.22	5%	1W F
R931	1-216-121-91	RES,CHIP	1M	5%	1/10W
R932	1-216-637-11	METAL CHIP	270	0.50%	1/10W
R933	1-216-619-11	METAL CHIP	47	0.50%	1/10W
R934	1-216-637-11	METAL CHIP	270	0.50%	1/10W
R935	1-216-637-11	METAL CHIP	270	0.50%	1/10W
R936	1-216-685-11	METAL CHIP	27K	0.50%	1/10W
R937	1-216-295-91	SHORT	0		
R938	1-216-686-11	METAL CHIP	30K	0.50%	1/10W
R939	1-216-679-11	METAL CHIP	15K	0.50%	1/10W
R975	1-216-295-91	SHORT	0		
R976	1-216-295-91	SHORT	0		
R1001	1-216-077-00	RES,CHIP	15K	5%	1/10W
R1002	1-216-079-00	RES,CHIP	18K	5%	1/10W
R1003	1-216-001-00	RES,CHIP	10	5%	1/10W
R1004	1-216-055-00	RES,CHIP	1.8K	5%	1/10W
R1005	1-216-043-91	RES,CHIP	560	5%	1/10W
R1006	1-216-001-00	RES,CHIP	10	5%	1/10W
R1007	1-216-057-00	RES,CHIP	5.6K	5%	1/10W
R1008	1-216-055-00	RES,CHIP	1.8K	5%	1/10W
R1009	1-216-051-00	RES,CHIP	1.2K	5%	1/10W
R1010	1-216-045-00	RES,CHIP	680	5%	1/10W
R1011	1-216-057-00	RES,CHIP	2.2K	5%	1/10W
R1012	1-216-025-91	RES,CHIP	100	5%	1/10W
R1013	1-216-061-00	RES,CHIP	3.3K	5%	1/10W
R1014	1-216-041-00	RES,CHIP	470	5%	1/10W
R1015	1-216-077-00	RES,CHIP	15K	5%	1/10W
R1016	1-216-073-00	RES,CHIP	10K	5%	1/10W
R1017	1-216-057-00	RES,CHIP	2.2K	5%	1/10W
R1018	1-216-653-11	METAL CHIP	1.2K	0.50%	1/10W
R1019	1-216-025-91	RES,CHIP	100	5%	1/10W
R1020	1-216-029-00	RES,CHIP	150	5%	1/10W
R1021	1-216-049-91	RES,CHIP	1K	5%	1/10W
R1022	1-216-073-00	RES,CHIP	10K	5%	1/10W
R1023	1-216-063-91	RES,CHIP	3.9K	5%	1/10W
R1024	1-216-073-00	RES,CHIP	10K	5%	1/10W
R1025	1-216-073-00	RES,CHIP	10K	5%	1/10W
R1026	1-216-017-91	RES,CHIP	47	5%	1/10W
R1027	1-216-061-00	RES,CHIP	22K	5%	1/10W
R1028	1-216-023-00	RES,CHIP	82	5%	1/10W
R1029	1-216-023-00	RES,CHIP	82	5%	1/10W
R1030	1-216-023-00	RES,CHIP	82	5%	1/10W
R1031	1-216-663-11	METAL CHIP	3.3K	0.50%	1/10W
R1032	1-216-650-11	METAL CHIP	910	0.50%	1/10W
R1033	1-216-633-11	METAL CHIP	180	0.50%	1/10W
R1034	1-216-664-11	METAL CHIP	3.6K	0.50%	1/10W
R1035	1-216-663-11	METAL CHIP	3.3K	0.50%	1/10W

Ri.NO.	PART NO.	DESCRIPTION			REMARK
R1036	1-216-650-11	METAL CHIP	910	0.50%	1/10W
R1037	1-216-664-11	METAL CHIP	3.6K	0.50%	1/10W
R1038	1-216-627-11	METAL CHIP	100	0.50%	1/10W
R1039	1-216-675-11	METAL CHIP	10K	0.50%	1/10W
R1040	1-216-663-11	METAL CHIP	3.3K	0.50%	1/10W
R1041	1-216-295-91	SHORT	0		
R1042	1-216-634-11	METAL CHIP	200	0.50%	1/10W
R1043	1-216-656-11	METAL CHIP	1.8K	0.50%	1/10W
R1044	1-216-634-11	METAL CHIP	200	0.50%	1/10W
R1045	1-216-025-91	RES,CHIP	100	5%	1/10W
R1046	1-216-295-91	SHORT	0		
R1047	1-216-017-91	RES,CHIP	47	5%	1/10W
R1048	1-216-664-11	METAL CHIP	3.6K	0.50%	1/10W
R1049	1-216-650-11	METAL CHIP	910	0.50%	1/10W
R1050	1-216-077-00	RES,CHIP	15K	5%	1/10W
R1051	1-216-075-00	RES,CHIP	12K	5%	1/10W
R1052	1-216-059-00	RES,CHIP	2.7K	5%	1/10W
R1053	1-216-043-91	RES,CHIP	560	5%	1/10W
R1054	1-216-067-00	RES,CHIP	5.6K	5%	1/10W
R1055	1-216-041-00	RES,CHIP	470	5%	1/10W
R1056	1-216-039-00	RES,CHIP	390	5%	1/10W
R1057	1-216-049-91	RES,CHIP	1K	5%	1/10W
R1058	1-216-049-91	RES,CHIP	1K	5%	1/10W
R1059	1-216-049-91	RES,CHIP	1K	5%	1/10W
R1060	1-216-073-00	RES,CHIP	10K	5%	1/10W
R1061	1-216-079-00	RES,CHIP	18K	5%	1/10W
R1062	1-216-025-91	RES,CHIP	100	5%	1/10W
R1063	1-216-017-91	RES,CHIP	47	5%	1/10W
R1064	1-216-061-00	RES,CHIP	3.3K	5%	1/10W
R1065	1-216-077-00	RES,CHIP	15K	5%	1/10W
R1066	1-216-073-00	RES,CHIP	10K	5%	1/10W
R1067	1-216-057-00	RES,CHIP	2.2K	5%	1/10W
R1068	1-216-043-91	RES,CHIP	560	5%	1/10W
R1069	1-216-067-00	RES,CHIP	5.6K	5%	1/10W
R1070	1-216-049-91	RES,CHIP	1K	5%	1/10W
R1071	1-216-043-91	RES,CHIP	560	5%	1/10W
R1072	1-216-049-91	RES,CHIP	1K	5%	1/10W
R1073	1-216-049-91	RES,CHIP	1K	5%	1/10W
R1074	1-216-073-00	RES,CHIP	10K	5%	1/10W
R1075	1-216-081-00	RES,CHIP	22K	5%	1/10W
R1076	1-216-025-91	RES,CHIP	100	5%	1/10W
R1077	1-216-061-00	RES,CHIP	3.3K	5%	1/10W
R1078	1-216-017-91	RES,CHIP	47	5%	1/10W
R1079	1-216-651-11	METAL CHIP	1K	0.50%	1/10W
R1080	1-216-295-91	SHORT	0		
R1081	1-216-651-11	METAL CHIP	1K	0.50%	1/10W
R1082	1-216-049-91	RES,CHIP	1K	5%	1/10W
R1083	1-216-682-11	METAL CHIP	20K	0.50%	1/10W
R1084	1-216-025-91	RES,CHIP	100	5%	1/10W
R1085	1-216-089-91	RES,CHIP	47K	5%	1/10W
R1086	1-216-033-00	RES,CHIP	220	5%	1/10W
R1089	1-216-133-00	RES,CHIP	3.3M	5%	1/10W
R1090	1-216-057-00	RES,CHIP	2.2K	5%	1/10W
R1091	1-216-644-11	METAL CHIP	510	0.50%	1/10W
R1092	1-216-627-11	METAL CHIP	100	0.50%	1/10W
R1093	1-216-023-00	RES,CHIP	82	5%	1/10W
R1094	1-216-029-00	RES,CHIP	150	5%	1/10W
R1095	1-216-041-00	RES,CHIP	470	5%	1/10W
R1096	1-216-019-00	RES,CHIP	56	5%	1/10W

Ref.NO.	PART NO.	DESCRIPTION			REMARK
R1097	1-216-009-00	RES,CHIP	22	5%	1/10W
R1098	1-216-039-00	RES,CHIP	390	5%	1/10W
R1099	1-216-097-91	RES,CHIP	100K	5%	1/10W
R1100	1-216-059-00	RES,CHIP	2.7K	5%	1/10W
R1101	1-216-057-00	RES,CHIP	2.2K	5%	1/10W
R1102	1-216-031-00	RES,CHIP	180	5%	1/10W
R1103	1-216-071-00	RES,CHIP	8.2K	5%	1/10W
R1104	1-216-053-00	RES,CHIP	1.5K	5%	1/10W
R1105	1-216-073-00	RES,CHIP	10K	5%	1/10W
R1106	1-216-073-00	RES,CHIP	10K	5%	1/10W
R1107	1-216-651-11	METAL CHIP	1K	0.50%	1/10W
R1108	1-216-651-11	METAL CHIP	1K	0.50%	1/10W
R1135	1-216-625-11	METAL CHIP	82	0.50%	1/10W
R1140	1-216-073-00	RES,CHIP	10K	5%	1/10W
R1141	1-216-073-00	RES,CHIP	10K	5%	1/10W
R1142	1-216-073-00	RES,CHIP	10K	5%	1/10W
R1143	1-216-073-00	RES,CHIP	10K	5%	1/10W
R1144	1-216-073-00	RES,CHIP	10K	5%	1/10W
R1145	1-216-073-00	RES,CHIP	10K	5%	1/10W
R1146	1-216-073-00	RES,CHIP	10K	5%	1/10W
R1147	1-216-073-00	RES,CHIP	10K	5%	1/10W
R1148	1-216-073-00	RES,CHIP	10K	5%	1/10W
R1149	1-216-073-00	RES,CHIP	10K	5%	1/10W
R1150	1-216-073-00	RES,CHIP	10K	5%	1/10W
R1151	1-216-073-00	RES,CHIP	10K	5%	1/10W
R1152	1-216-073-00	RES,CHIP	10K	5%	1/10W
R1153	1-216-073-00	RES,CHIP	10K	5%	1/10W
R1154	1-216-073-00	RES,CHIP	10K	5%	1/10W
R1155	1-216-073-00	RES,CHIP	10K	5%	1/10W
R1156	1-216-073-00	RES,CHIP	10K	5%	1/10W
R1157	1-216-073-00	RES,CHIP	10K	5%	1/10W
R1158	1-216-073-00	RES,CHIP	10K	5%	1/10W
R1159	1-216-073-00	RES,CHIP	10K	5%	1/10W
R1160	1-216-073-00	RES,CHIP	10K	5%	1/10W
R1161	1-216-073-00	RES,CHIP	10K	5%	1/10W
R1162	1-216-073-00	RES,CHIP	10K	5%	1/10W
R1163	1-216-073-00	RES,CHIP	10K	5%	1/10W
R1164	1-216-073-00	RES,CHIP	10K	5%	1/10W
R1165	1-216-073-00	RES,CHIP	10K	5%	1/10W
R1166	1-216-073-00	RES,CHIP	10K	5%	1/10W
R1167	1-216-073-00	RES,CHIP	10K	5%	1/10W
R1168	1-216-073-00	RES,CHIP	10K	5%	1/10W
R1169	1-216-073-00	RES,CHIP	10K	5%	1/10W
R1170	1-216-073-00	RES,CHIP	10K	5%	1/10W
R1171	1-216-073-00	RES,CHIP	10K	5%	1/10W
R1175	1-216-065-91	RES,CHIP	4.7K	5%	1/10W
R1176	1-216-065-91	RES,CHIP	4.7K	5%	1/10W
R1200	1-216-041-00	RES,CHIP	470	5%	1/10W
R1201	1-216-055-00	RES,CHIP	1.8K	5%	1/10W
R1202	1-216-061-00	RES,CHIP	3.3K	5%	1/10W
R1203	1-216-645-11	METAL CHIP	560	0.50%	1/10W
R1204	1-216-687-11	METAL CHIP	33K	0.50%	1/10W
R1205	1-216-681-11	METAL CHIP	18K	0.50%	1/10W
R1206	1-216-049-91	RES,CHIP	1K	5%	1/10W
R1207	1-216-025-91	RES,CHIP	100	5%	1/10W
R1211	1-216-085-00	RES,CHIP	82K	5%	1/10W
R1212	1-216-085-00	RES,CHIP	82K	5%	1/10W
R1213	1-216-077-00	RES,CHIP	15K	5%	1/10W
R1214	1-216-077-00	RES,CHIP	15K	5%	1/10W

Ref.NO.	PART NO.	DESCRIPTION			REMARK
R1215	1-216-073-00	RES,CHIP	10K	5%	1/10W
R1216	1-216-073-00	RES,CHIP	10K	5%	1/10W
R1217	1-216-073-00	RES,CHIP	10K	5%	1/10W
R1218	1-216-073-00	RES,CHIP	10K	5%	1/10W
R1219	1-216-689-11	RES,CHIP	39K	5%	1/10W
R1220	1-216-689-11	RES,CHIP	39K	5%	1/10W
R1221	1-216-093-00	RES,CHIP	68K	5%	1/10W
R1222	1-216-689-11	RES,CHIP	39K	5%	1/10W
R1223	1-216-081-00	RES,CHIP	22K	5%	1/10W
R1224	1-216-081-00	RES,CHIP	22K	5%	1/10W
R1225	1-216-682-11	METAL CHIP	20K	0.50%	1/10W
R1226	1-216-081-00	RES,CHIP	22K	5%	1/10W
R1227	1-216-081-00	RES,CHIP	22K	5%	1/10W
R1228	1-216-081-00	RES,CHIP	22K	5%	1/10W
R1229	1-216-089-91	RES,CHIP	47K	5%	1/10W
R1230	1-216-089-91	RES,CHIP	47K	5%	1/10W
R1231	1-216-033-00	RES,CHIP	220	5%	1/10W
R1232	1-216-081-00	RES,CHIP	22K	5%	1/10W
R1233	1-216-001-00	RES,CHIP	10	5%	1/10W
R1239	1-216-073-00	RES,CHIP	10K	5%	1/10W
R1240	1-216-073-00	RES,CHIP	10K	5%	1/10W
R1241	1-216-085-00	RES,CHIP	33K	5%	1/10W

<TEST PIN>

TP7	1-535-757-11	CHIP, CHECKER
TP8	1-535-757-11	CHIP, CHECKER
TP10	1-535-757-11	CHIP, CHECKER
TP11	1-535-757-11	CHIP, CHECKER
TP12	1-535-757-11	CHIP, CHECKER
TP13	1-535-757-11	CHIP, CHECKER
TP14	1-535-757-11	CHIP, CHECKER
TP71	1-535-757-11	CHIP, CHECKER
TP72	1-535-757-11	CHIP, CHECKER
TP73	1-535-757-11	CHIP, CHECKER
TP101	1-535-757-11	CHIP, CHECKER
TP102	1-535-757-11	CHIP, CHECKER
TP103	1-535-757-11	CHIP, CHECKER
TP104	1-535-757-11	CHIP, CHECKER
TP105	1-535-757-11	CHIP, CHECKER
TP106	1-535-757-11	CHIP, CHECKER
TP107	1-535-757-11	CHIP, CHECKER
TP109	1-535-757-11	CHIP, CHECKER
TP111	1-535-757-11	CHIP, CHECKER
TP112	1-535-757-11	CHIP, CHECKER
TP200	1-535-757-11	CHIP, CHECKER
TP301	1-535-757-11	CHIP, CHECKER
TP302	1-535-757-11	CHIP, CHECKER
TP303	1-535-757-11	CHIP, CHECKER
TP304	1-535-757-11	CHIP, CHECKER
TP305	1-535-757-11	CHIP, CHECKER
TP306	1-535-757-11	CHIP, CHECKER
TP307	1-535-757-11	CHIP, CHECKER
TP501	1-535-757-11	CHIP, CHECKER
TP502	1-535-757-11	CHIP, CHECKER
TP503	1-535-757-11	CHIP, CHECKER
TP505	1-535-757-11	CHIP, CHECKER
TP506	1-535-757-11	CHIP, CHECKER
TP701	1-535-757-11	CHIP, CHECKER

B B1 AI

Rf.NO.	PART NO.	DESCRIPTION	REMARK
TP702	1-535-757-11	CHIP, CHECKER	
TP703	1-535-757-11	CHIP, CHECKER	
TP704	1-535-757-11	CHIP, CHECKER	
TP705	1-535-757-11	CHIP, CHECKER	
TP706	1-535-757-11	CHIP, CHECKER	
TP707	1-535-757-11	CHIP, CHECKER	
TP708	1-535-757-11	CHIP, CHECKER	
TP709	1-535-757-11	CHIP, CHECKER	
TP710	1-535-757-11	CHIP, CHECKER	
TP711	1-535-757-11	CHIP, CHECKER	
TP1001	1-535-757-11	CHIP, CHECKER	
	<CRYSTAL>		
X250	1-760-040-11	VIBRATOR, CRYSTAL	
X251	1-527-722-00	VIBRATOR, CRYSTAL	
X301	1-577-611-11	OSCILALTOR, CERAMIC	
X302	1-567-504-11	OSCILLATOR, CRYSTAL	
X303	1-567-505-11	OSCILLATOR, CRYSTAL	
X1001	1-579-057-11	VIBRATOR, CRYSTAL	
X1002	1-527-722-00	VIBRATOR, CRYSTAL	
X1003	1-577-611-11	OSCILALTOR, CERAMIC	
X1004	1-579-583-11	VIBRATOR, CERAMIC	

* A-1131-325-A B1 BOARD, COMPLETE

<CAPACITOR>

C1001	1-126-933-11	ELECT	100MF	20%	16V
C1002	1-104-664-11	ELECT	47MF	20%	16V
C1003	1-163-229-11	CERAMIC CHIP	12PF	5%	50V
C1004	1-163-231-11	CERAMIC CHIP	15PF	5%	50V
C1005	1-104-664-11	ELECT	47MF	20%	16V
C1006	1-164-004-11	CERAMIC CHIP	0.1MF	10%	25V
C1007	1-104-664-11	ELECT	47MF	20%	16V
C1008	1-164-004-11	CERAMIC CHIP	0.1MF	10%	25V
C1009	1-104-664-11	ELECT	47MF	20%	16V

<CONNECTOR>

CN1001	1-774-551-11	CONNECTOR, BOARD TO BOARD 5P
CN1002	1-774-551-11	CONNECTOR, BOARD TO BOARD 5P

<DIODE>

D1001	8-719-105-91	DIODE RD5.6M-B2

<DELAY LINE>

DL1001	1-402-770-11	DELAY LINE

<TRANSISTOR>

Q1001	8-729-120-28	TRANSISTOR 2SC1623-L5L6
Q1002	8-729-120-28	TRANSISTOR 2SC1623-L5L6
Q1003	8-729-120-28	TRANSISTOR 2SC1623-L5L6
Q1004	8-729-120-28	TRANSISTOR 2SC1623-L5L6
Q1005	8-729-120-28	TRANSISTOR 2SC1623-L5L6
Q1006	8-729-120-28	TRANSISTOR 2SC1623-L5L6
Q1007	8-729-120-28	TRANSISTOR 2SC1623-L5L6

<RESISTOR>

R1001	1-216-675-11	METAL CHIP	10K	0.50%	1/10W
R1002	1-216-681-11	METAL CHIP	18K	0.50%	1/10W
R1003	1-216-663-11	METAL CHIP	3.3K	0.50%	1/10W
R1004	1-216-675-11	METAL CHIP	10K	0.50%	1/10W
R1005	1-216-669-11	METAL CHIP	5.6K	0.50%	1/10W
R1006	1-216-659-11	METAL CHIP	2.2K	0.50%	1/10W
R1007	1-216-675-11	METAL CHIP	10K	0.50%	1/10W
R1008	1-216-669-11	METAL CHIP	5.6K	0.50%	1/10W
R1009	1-216-657-11	METAL CHIP	1.8K	0.50%	1/10W
R1010	1-216-657-11	METAL CHIP	1.8K	0.50%	1/10W
R1011	1-216-651-11	METAL CHIP	1K	0.50%	1/10W
R1012	1-216-651-11	METAL CHIP	1K	0.50%	1/10W
R1013	1-216-651-11	METAL CHIP	1K	0.50%	1/10W
R1014	1-216-663-11	METAL CHIP	3.3K	0.50%	1/10W
R1015	1-216-649-11	METAL CHIP	820	0.50%	1/10W
R1016	1-216-645-11	METAL CHIP	560	0.50%	1/10W
R1017	1-216-651-11	METAL CHIP	1K	0.50%	1/10W
R1018	1-216-651-11	METAL CHIP	1K	0.50%	1/10W
R1019	1-216-669-11	METAL CHIP	5.6K	0.50%	1/10W
R1020	1-216-679-11	METAL CHIP	15K	0.50%	1/10W
R1021	1-216-681-11	METAL CHIP	18K	0.50%	1/10W
R1022	1-216-671-11	METAL CHIP	6.8K	0.50%	1/10W
R1023	1-216-659-11	METAL CHIP	2.2K	0.50%	1/10W

* A-1294-135-A AI BOARD, COMPLETE

<CAPACITOR>

C6002	1-163-031-11	CERAMIC CHIP	0.01MF	50V	
C6004	1-164-004-11	CERAMIC CHIP	0.1MF	10%	25V
C6005	1-163-031-11	CERAMIC CHIP	0.01MF	50V	
C6008	1-126-206-11	ELECT CHIP	100MF	20%	6.3V
C6012	1-126-396-11	ELECT CHIP	47MF	20%	16V
C6020	1-126-395-11	ELECT CHIP	22MF	20%	16V
C6021	1-126-395-11	ELECT CHIP	22MF	20%	16V
C6022	1-126-392-11	ELECT CHIP	100MF	20%	6.3V
C6023	1-126-392-11	ELECT CHIP	100MF	20%	6.3V
C6024	1-126-395-11	ELECT CHIP	22MF	20%	16V
C6025	1-163-251-11	CERAMIC CHIP	100PF	5%	50V
C6026	1-126-395-11	ELECT CHIP	22MF	20%	16V
C6027	1-163-251-11	CERAMIC CHIP	100PF	5%	50V
C6028	1-164-004-11	CERAMIC CHIP	0.1MF	10%	25V
C6029	1-164-004-11	CERAMIC CHIP	0.1MF	10%	25V
C6030	1-164-004-11	CERAMIC CHIP	0.1MF	10%	25V
C6031	1-164-004-11	CERAMIC CHIP	0.1MF	10%	25V
C6032	1-164-004-11	CERAMIC CHIP	0.1MF	10%	25V
C6033	1-164-004-11	CERAMIC CHIP	0.1MF	10%	25V
C6034	1-163-031-11	CERAMIC CHIP	0.01MF	50V	
C6035	1-163-031-11	CERAMIC CHIP	0.01MF	50V	

<CONNECTOR>

CN6001	1-774-552-11	CONNECTOR, BOARD TO BOARD 10P

Rf.NO.	PART NO.	DESCRIPTION	REMARK
CN6002	1-506-472-11	PIN, CONNECTOR 7P	
CN6003	1-564-006-71	PIN, CONNECTOR 7P	
CN6004	1-506-484-11	PIN, CONNECTOR 5P	
CN6005	1-774-552-11	CONNECTOR, BOARD TO BOARD 10P	
		<DIODE>	
D6001	8-719-404-49	DIODE MA111	
D6002	8-719-404-49	DIODE MA111	
D6003	8-719-404-49	DIODE MA111	
D6004	8-719-404-49	DIODE MA111	
		<IC>	
IC6001	8-759-454-11	IC MC74HC589AFEL	
IC6002	8-759-245-58	IC TC35095AF	
IC6003	8-759-925-80	IC SN74HC14ANS	
IC6004	8-759-032-23	IC MC74HC74AF-T2	
IC6005	8-759-327-60	IC TC7W125FU-TE12R	
		<RESISTOR>	
R6007	1-216-677-11	METAL CHIP 12K 0.50% 1/10W	
R6008	1-216-677-11	METAL CHIP 12K 0.50% 1/10W	
R6028	1-216-049-91	RES,CHIP 1K 5% 1/10W	
R6029	1-216-049-91	RES,CHIP 1K 5% 1/10W	
R6030	1-216-073-00	RES,CHIP 10K 5% 1/10W	
R6031	1-216-073-00	RES,CHIP 10K 5% 1/10W	
R6035	1-216-025-91	RES,CHIP 100 5% 1/10W	
R6036	1-216-025-91	RES,CHIP 100 5% 1/10W	
R6037	1-216-025-91	RES,CHIP 100 5% 1/10W	
R6040	1-216-097-91	RES,CHIP 100K 5% 1/10W	
R6050	1-216-673-11	METAL CHIP 8.2K 0.50% 1/10W	
R6051	1-216-673-11	METAL CHIP 8.2K 0.50% 1/10W	
R6052	1-216-049-91	RES,CHIP 1K 5% 1/10W	
R6053	1-216-001-00	RES,CHIP 10 5% 1/10W	
R6054	1-216-001-00	RES,CHIP 10 5% 1/10W	
R6055	1-216-001-00	RES,CHIP 10 5% 1/10W	
R6056	1-216-001-00	RES,CHIP 10 5% 1/10W	
R6057	1-216-001-00	RES,CHIP 10 5% 1/10W	
R6058	1-216-073-00	RES,CHIP 10K 5% 1/10W	
R6059	1-216-073-00	RES,CHIP 10K 5% 1/10W	
R6060	1-216-073-00	RES,CHIP 10K 5% 1/10W	
R6061	1-216-073-00	RES,CHIP 10K 5% 1/10W	
R6062	1-216-073-00	RES,CHIP 10K 5% 1/10W	
	* A-1294-154-A	AF MOUNT	
		<CAPACITOR>	
C6501	1-126-392-11	ELECT CHIP 100MF 20% 6.3V	
C6502	1-164-004-11	CERAMIC CHIP 0.1MF 10% 25V	
C6503	1-164-004-11	CERAMIC CHIP 0.1MF 10% 25V	
		<CONNECTOR>	
CN6501	* 1-564-520-11	PLUG, CONNECTOR 5P	
		<IC>	
IC6501	8-759-032-59	IC MC74HC595AF	
IC6502	8-759-032-59	IC MC74HC595AF	

Rf.NO.	PART NO.	DESCRIPTION	REMARK
IC6503	8-719-045-58	DIODE LB-602MA2	
		<RESISTOR>	
R6501	1-216-039-00	RES,CHIP 390 5% 1/10W	
R6502	1-216-039-00	RES,CHIP 390 5% 1/10W	
R6503	1-216-039-00	RES,CHIP 390 5% 1/10W	
R6504	1-216-039-00	RES,CHIP 390 5% 1/10W	
R6505	1-216-039-00	RES,CHIP 390 5% 1/10W	
R6506	1-216-039-00	RES,CHIP 390 5% 1/10W	
R6507	1-216-039-00	RES,CHIP 390 5% 1/10W	
R6508	1-216-039-00	RES,CHIP 390 5% 1/10W	
R6509	1-216-039-00	RES,CHIP 390 5% 1/10W	
R6510	1-216-039-00	RES,CHIP 390 5% 1/10W	
R6511	1-216-039-00	RES,CHIP 390 5% 1/10W	
R6512	1-216-039-00	RES,CHIP 390 5% 1/10W	
R6513	1-216-039-00	RES,CHIP 390 5% 1/10W	
R6514	1-216-039-00	RES,CHIP 390 5% 1/10W	
R6515	1-216-039-00	RES,CHIP 390 5% 1/10W	
R6516	1-216-039-00	RES,CHIP 390 5% 1/10W	
	* A-1311-644-A	G1 BOARD, COMPLETE	
		<CONNECTOR>	
CN5001	1-506-488-11	PIN, CONNECTOR 9P	
CN5002	1-506-483-21	PIN, CONNECTOR 4P	
CN5003	1-506-482-11	PIN, CONNECTOR 3P	
CN5004	1-506-494-11	PIN, CONNECTOR 15P	
CN5005	1-506-484-11	PIN, CONNECTOR 5P	
CN5006*	1-785-108-11	PIN, CONNECTOR (PC BOARD) 40P	
	* A-1311-645-A	G2 BOARD, COMPLETE	
CN4001	1-564-517-11	PLUG, CONNECTOR 2P	
CN4002	* 1-564-519-11	PLUG, CONNECTOR 4P	
CN4003	1-564-524-11	PLUG, CONNECTOR 9P	
CN4004	* 1-564-519-11	PLUG, CONNECTOR 4P	
CN4005	* 1-564-519-11	PLUG, CONNECTOR 4P	
CN4006*	1-564-594-11	PLUG, CONNECTOR 15P	
CN4007*	1-785-109-11	SOCKET, CONNECTOR 40P	
CN4008*	1-564-520-11	PLUG, CONNECTOR 5P	
	* A-1372-452-A	H2 BOARD, COMPLETE	
	1-923-501-99	WIRE UL1061 AWG26 30MM RED	
		<CAPACITOR>	
C801	1-126-396-11	ELECT CHIP 47MF 20% 16V	
C802	1-164-004-11	CERAMIC CHIP 0.1MF 10% 25V	
C803	1-164-004-11	CERAMIC CHIP 0.1MF 10% 25V	
C804	1-164-004-11	CERAMIC CHIP 0.1MF 10% 25V	
C805	1-164-004-11	CERAMIC CHIP 0.1MF 10% 25V	
C806	1-126-391-11	ELECT CHIP 47MF 20% 6.3V	

Rf.NO.	PART NO.	DESCRIPTION			REMARK
C807	1-164-004-11	CERAMIC CHIP	0.1MF	10%	25V
C808	1-126-391-11	ELECT CHIP	47MF	20%	6.3V
C809	1-126-391-11	ELECT CHIP	47MF	20%	6.3V
C850	1-126-392-11	ELECT CHIP	100MF	20%	6.3V
C851	1-126-396-11	ELECT CHIP	47MF	20%	16V
C871	1-126-392-11	ELECT CHIP	100MF	20%	6.3V
C872	1-164-004-11	CERAMIC CHIP	0.1MF	10%	25V
C873	1-126-396-11	ELECT CHIP	47MF	20%	16V
C874	1-163-009-11	CERAMIC CHIP	0.001MF	10%	50V
C875	1-163-037-11	CERAMIC CHIP	0.022MF	10%	50V
C876	1-163-009-11	CERAMIC CHIP	0.001MF	10%	50V
C877	1-164-004-11	CERAMIC CHIP	0.1MF	10%	25V
C878	1-164-004-11	CERAMIC CHIP	0.1MF	10%	25V
C881	1-126-391-11	ELECT CHIP	47MF	20%	6.3V
C882	1-164-004-11	CERAMIC CHIP	0.1MF	10%	25V
C883	1-164-004-11	CERAMIC CHIP	0.1MF	10%	25V
		<CONNECTOR>			
CN801	1-506-480-11	PIN, CONNECTOR 15P			
CN802	1-506-472-11	PIN, CONNECTOR 7P			
CN803	1-774-552-11	CONNECTOR, BOARD TO BOARD 10P			
CN804	1-774-553-11	CONNECTOR, BOARD TO BOARD 15P			
CN807	1-506-468-11	PIN, CONNECTOR 3P*			
CN808	1-506-473-11	PIN, CONNECTOR 8P			
CN809	* 1-563-865-21	SOCKET, CONNECTOR 30P			
CN810	* 1-563-865-21	SOCKET, CONNECTOR 30P			
CN811	* 1-563-865-21	SOCKET, CONNECTOR 30P			
CN812	1-774-553-11	CONNECTOR, BOARD TO BOARD 15P			
CN813	1-774-553-11	CONNECTOR, BOARD TO BOARD 15P			
CN814	1-774-553-11	CONNECTOR, BOARD TO BOARD 15P			
CN815	1-506-469-11	PIN, CONNECTOR 4P			
CN816	* 1-564-005-11	PIN, CONNECTOR 6P			
CN871	1-506-468-11	PIN, CONNECTOR 3P			
CN873	1-506-475-11	PIN, CONNECTOR 10P			
		<DIODE>			
D801	8-719-404-49	DIODE MA111			
D802	8-719-404-49	DIODE MA111			
D803	8-719-158-15	DIODE RD5.6SB			
D804	8-719-158-15	DIODE RD5.6SB			
D805	8-719-158-15	DIODE RD5.6SB			
D806	8-719-158-15	DIODE RD5.6SB			
D807	8-719-158-15	DIODE RD5.6SB			
D808	8-719-158-15	DIODE RD5.6SB			
D809	8-719-158-15	DIODE RD5.6SB			
D810	8-719-158-15	DIODE RD5.6SB			
D811	8-719-158-15	DIODE RD5.6SB			
D812	8-719-158-15	DIODE RD5.6SB			
D850	8-719-978-04	DIODE DTZ-TT11-3.3B			
D851	8-719-978-04	DIODE DTZ-TT11-3.3B			
D852	8-719-404-49	DIODE MA111			
D853	8-719-404-49	DIODE MA111			
D871	8-719-404-49	DIODE MA111			
D872	8-719-404-49	DIODE MA111			
D873	8-719-404-49	DIODE MA111			
D874	8-719-404-49	DIODE MA111			
D875	8-719-404-49	DIODE MA111			
D876	8-719-404-49	DIODE MA111			
D877	8-719-404-49	DIODE MA111			
D878	8-719-404-49	DIODE MA111			
D879	8-719-404-49	DIODE MA111			
D880	8-719-404-49	DIODE MA111			
D881	8-719-404-49	DIODE MA111			
D882	8-719-404-49	DIODE MA111			
D898	8-719-404-49	DIODE MA111			
D899	8-719-404-49	DIODE MA111			
		<IC>			
IC801	8-759-168-19	IC TA78L09F-TE12L			
IC802	8-759-358-46	IC MM1114XFBE			
IC803	8-759-358-46	IC MM1114XFBE			
IC871	8-759-467-84	IC MC68HC05P6SC442119B			
IC872	8-759-058-62	IC TC7S08FU(TE85R)			
IC873	8-759-058-62	IC TC7S08FU(TE85R)			
		<COIL>			
L801	1-414-042-21	INDUCTOR	18UH		
L871	1-408-615-31	INDUCTOR	100UH		
L872	1-410-682-31	INDUCTOR	470UH		
		<TRANSISTOR>			
Q850	8-729-027-38	TRANSISTOR DTA144EKA-T146			
Q851	1-801-806-11	TRANSISTOR DTC144EKA-T146			
Q852	8-729-027-38	TRANSISTOR DTA144EKA-T146			
Q853	1-801-806-11	TRANSISTOR DTC144EKA-T146			
Q871	1-801-806-11	TRANSISTOR DTC144EKA-T146			
Q872	8-729-901-98	TRANSISTOR 2SA1036K-R			
Q873	8-729-901-98	TRANSISTOR 2SA1036K-R			
Q874	1-801-806-11	TRANSISTOR DTC144EKA-T146			
Q875	1-801-806-11	TRANSISTOR DTC144EKA-T146			
Q876	1-801-806-11	TRANSISTOR DTC144EKA-T146			
Q877	1-801-806-11	TRANSISTOR DTC144EKA-T146			
Q878	8-729-901-04	TRANSISTOR DTA114EK			
Q879	1-801-806-11	TRANSISTOR DTC144EKA-T146			
		<RESISTOR>			
R801	1-216-033-00	RES,CHIP	220	5%	1/10W
R802	1-216-655-11	METAL CHIP	1.5K	0.50%	1/10W
R803	1-216-033-00	RES,CHIP	220	5%	1/10W
R804	1-216-655-11	METAL CHIP	1.5K	0.50%	1/10W
R805	1-249-429-11	CARBON	10K	5%	1/4W
R850	1-216-049-91	RES,CHIP	1K	5%	1/10W
R851	1-216-089-91	RES,CHIP	47K	5%	1/10W
R852	1-216-049-91	RES,CHIP	1K	5%	1/10W
R853	1-249-381-11	CARBON	1	5%	1/4W F
R871	1-216-294-00	RES,CHIP	10M	5%	1/8W
R872	1-216-049-91	RES,CHIP	1K	5%	1/10W
R873	1-216-065-91	RES,CHIP	4.7K	5%	1/10W
R874	1-216-073-00	RES,CHIP	10K	5%	1/10W
R875	1-216-073-00	RES,CHIP	10K	5%	1/10W
R876	1-216-065-91	RES,CHIP	4.7K	5%	1/10W
R877	1-216-097-91	RES,CHIP	100K	5%	1/10W
R878	1-216-009-00	RES,CHIP	22	5%	1/10W

Ref.NO.	PART NO.	DESCRIPTION			REMARK
R879	1-216-005-00	RES,CHIP	15	5% 1/10W	
R880	1-216-009-00	RES,CHIP	22	5% 1/10W	
R881	1-216-009-00	RES,CHIP	22	5% 1/10W	
R882	1-216-009-00	RES,CHIP	22	5% 1/10W	
R883	1-216-009-00	RES,CHIP	22	5% 1/10W	
R884	1-216-089-91	RES,CHIP	47K	5% 1/10W	
R885	1-216-073-00	RES,CHIP	10K	5% 1/10W	
R886	1-216-073-00	RES,CHIP	10K	5% 1/10W	
R887	1-216-089-91	RES,CHIP	47K	5% 1/10W	
R888	1-216-073-00	RES,CHIP	10K	5% 1/10W	
R889	1-216-037-00	RES,CHIP	330	5% 1/10W	
R895	1-216-049-91	RES,CHIP	1K	5% 1/10W	
R896	1-216-049-91	RES,CHIP	1K	5% 1/10W	
R897	1-216-049-91	RES,CHIP	1K	5% 1/10W	
R898	1-216-049-91	RES,CHIP	1K	5% 1/10W	
R899	1-216-295-91	SHORT	0		
		<CRYSTAL>			
X871	1-577-358-21	VIBRATOR, CERAMIC			
		* A-1372-453-A H6 BOARD, COMPLETE			
		<CONNECTOR>			
CN701	1-506-468-11	PIN, CONNECTOR 3P			
CN702	1-506-473-11	PIN, CONNECTOR 8P			
CN703	1-506-475-11	PIN, CONNECTOR 10P			
CN708	1-506-472-11	PIN, CONNECTOR 7P			
CN709	1-506-474-11	PIN, CONNECTOR 9P			
CN710	* 1-564-005-11	PIN, CONNECTOR 6P			
	* A-1372-454-A H5 MOUNT				
		<CONNECTOR>			
CN201	1-774-525-11	SOCKET, CONNECTOR 64P			
CN202	1-774-525-11	SOCKET, CONNECTOR 64P			
CN203	1-569-922-11	SOCKET, CONNECTOR 30P			
CN204	1-569-922-11	SOCKET, CONNECTOR 30P			
CN205	1-569-922-11	SOCKET, CONNECTOR 30P			
CN206	1-506-485-11	PIN, CONNECTOR 6P			
CN207	1-506-485-11	PIN, CONNECTOR 6P			
		* A-1372-455-A H1 BOARD, COMPLETE			
		<CAPACITOR>			
C101	1-128-526-11	ELECT	100MF	20% 16V	
C102	1-164-004-11	CERAMIC CHIP	0.1MF	10% 25V	
C103	1-107-701-11	ELECT	47MF	20% 16V	
C104	1-107-701-11	ELECT	47MF	20% 16V	
C105	1-128-526-11	ELECT	100MF	20% 16V	
C106	1-163-113-00	CERAMIC CHIP	68PF	5% 50V	
C107	1-107-701-11	ELECT	47MF	20% 16V	
C108	1-107-701-11	ELECT	47MF	20% 16V	
C109	1-107-701-11	ELECT	47MF	20% 16V	
C110	1-107-701-11	ELECT	47MF	20% 16V	

Ref.NO.	PART NO.	DESCRIPTION			REMARK
C111	1-164-004-11	CERAMIC CHIP	0.1MF	10% 25V	
C112	1-107-701-11	ELECT	47MF	20% 16V	
C113	1-164-004-11	CERAMIC CHIP	0.1MF	10% 25V	
C114	1-107-701-11	ELECT	47MF	20% 16V	
C115	1-107-701-11	ELECT	47MF	20% 16V	
C116	1-164-004-11	CERAMIC CHIP	0.1MF	10% 25V	
C117	1-107-701-11	ELECT	47MF	20% 16V	
C118	1-107-701-11	ELECT	47MF	20% 16V	
C119	1-107-701-11	ELECT	47MF	20% 16V	
C120	1-128-526-11	ELECT	100MF	20% 16V	
C121	1-163-113-00	CERAMIC CHIP	68PF	5% 50V	
C122	1-107-701-11	ELECT	47MF	20% 16V	
C123	1-107-701-11	ELECT	47MF	20% 16V	
C124	1-107-701-11	ELECT	47MF	20% 16V	
C125	1-107-701-11	ELECT	47MF	20% 16V	
C126	1-164-004-11	CERAMIC CHIP	0.1MF	10% 25V	
C127	1-107-701-11	ELECT	47MF	20% 16V	
C128	1-107-716-11	ELECT	33MF	20% 16V	
C129	1-107-716-11	ELECT	33MF	20% 16V	
C130	1-107-716-11	ELECT	33MF	20% 16V	
C131	1-164-004-11	CERAMIC CHIP	0.1MF	10% 25V	
C132	1-128-526-11	ELECT	100MF	20% 16V	
C133	1-128-526-11	ELECT	100MF	20% 16V	
C134	1-164-004-11	CERAMIC CHIP	0.1MF	10% 25V	
C135	1-164-004-11	CERAMIC CHIP	0.1MF	10% 25V	
C136	1-164-004-11	CERAMIC CHIP	0.1MF	10% 25V	
C137	1-164-004-11	CERAMIC CHIP	0.1MF	10% 25V	
C138	1-104-664-11	ELECT	47MF	20% 16V	
C139	1-163-263-11	CERAMIC CHIP	330PF	5% 50V	
C140	1-164-004-11	CERAMIC CHIP	0.1MF	10% 25V	
C141	1-126-933-11	ELECT	100MF	20% 16V	
C142	1-126-933-11	ELECT	100MF	20% 16V	
C143	1-164-004-11	CERAMIC CHIP	0.1MF	10% 25V	
C144	1-164-004-11	CERAMIC CHIP	0.1MF	10% 25V	
C145	1-104-664-11	ELECT	47MF	20% 25V	
C146	1-163-253-11	CERAMIC CHIP	120PF	5% 50V	
C147	1-163-253-11	CERAMIC CHIP	120PF	5% 50V	
C148	1-163-253-11	CERAMIC CHIP	120PF	5% 50V	
C181	1-136-177-00	FILM	1MF	5% 50V	
C182	1-136-177-00	FILM	1MF	5% 50V	
C183	1-136-177-00	FILM	1MF	5% 50V	
C184	1-136-177-00	FILM	1MF	5% 50V	
C187	1-104-665-11	ELECT	100MF	20% 10V	
C191	1-136-177-00	FILM	1MF	5% 50V	
C192	1-136-177-00	FILM	1MF	5% 50V	
C193	1-136-177-00	FILM	1MF	5% 50V	
C194	1-136-177-00	FILM	1MF	5% 50V	
		<CONNECTOR>			
CN101	* 1-564-011-11	PIN, CONNECTOR 12P			
CN102	1-506-473-11	PIN, CONNECTOR 8P			
CN103	* 1-564-005-11	PIN, CONNECTOR 6P			
CN104	1-774-523-11	PIN, CONNECTOR (PC BOARD) 64P			
CN105	1-506-472-11	PIN, CONNECTOR 7P			
		<DIODE>			
D101	8-719-105-91	DIODE RD5.6M-B2			

H1

Ref.No.	PART NO.	DESCRIPTION	REMARK
D102	8-719-105-91	DIODE RD5.6M-B2	
D103	8-719-105-91	DIODE RD5.6M-B2	
D104	8-719-105-91	DIODE RD5.6M-B2	
D181	8-719-404-49	DIODE MA111	
D182	8-719-404-49	DIODE MA111	
D183	8-719-404-49	DIODE MA111	
D191	8-719-404-49	DIODE MA111	
D192	8-719-404-49	DIODE MA111	
D193	8-719-404-49	DIODE MA111	
	<IC>		
IC101	8-759-360-07	IC BA7657F-E2	
IC102	8-759-383-61	IC TL026CPS-E05	
IC103	8-759-383-61	IC TL026CPS-E05	
IC104	8-759-970-89	IC BA10358F	
IC105	8-759-390-38	IC UPC24M12AHF	
	<CHIP CONDUCTOR>		
JR102	1-216-295-91	SHORT 0	
	<COIL>		
L101	1-408-615-31	INDUCTOR 100UH	
	<TRANSISTOR>		
Q101	8-729-120-28	TRANSISTOR 2SC1623-L5L6	
Q102	8-729-120-28	TRANSISTOR 2SC1623-L5L6	
Q103	8-729-120-28	TRANSISTOR 2SC1623-L5L6	
Q104	8-729-120-28	TRANSISTOR 2SC1623-L5L6	
Q105	8-729-120-28	TRANSISTOR 2SC1623-L5L6	
Q106	8-729-120-28	TRANSISTOR 2SC1623-L5L6	
Q107	8-729-120-28	TRANSISTOR 2SC1623-L5L6	
Q108	8-729-120-28	TRANSISTOR 2SC1623-L5L6	
Q109	8-729-120-28	TRANSISTOR 2SC1623-L5L6	
Q110	8-729-120-28	TRANSISTOR 2SC1623-L5L6	
Q111	8-729-120-28	TRANSISTOR 2SC1623-L5L6	
Q112	8-729-120-28	TRANSISTOR 2SC1623-L5L6	
Q113	8-729-120-28	TRANSISTOR 2SC1623-L5L6	
Q114	8-729-120-28	TRANSISTOR 2SC1623-L5L6	
Q181	8-729-216-22	TRANSISTOR 2SA1162-G	
Q182	1-801-806-11	TRANSISTOR DTC144EKA-T146	
Q191	8-729-216-22	TRANSISTOR 2SA1162-G	
Q192	1-801-806-11	TRANSISTOR DTC144EKA-T146	
	<RESISTOR>		
R101	1-216-675-11	METAL CHIP 10K	0.50% 1/10W
R102	1-216-669-11	METAL CHIP 5.6K	0.50% 1/10W
R103	1-216-649-11	METAL CHIP 820	0.50% 1/10W
R104	1-216-667-11	METAL CHIP 4.7K	0.50% 1/10W
R105	1-216-667-11	METAL CHIP 4.7K	0.50% 1/10W
R106	1-216-667-11	METAL CHIP 4.7K	0.50% 1/10W
R107	1-216-639-11	METAL CHIP 330	0.50% 1/10W
R108	1-216-667-11	METAL CHIP 4.7K	0.50% 1/10W
R109	1-216-667-11	METAL CHIP 4.7K	0.50% 1/10W
R110	1-216-639-11	METAL CHIP 330	0.50% 1/10W
R111	1-216-669-11	METAL CHIP 5.6K	0.50% 1/10W

Ref.No.	PART NO.	DESCRIPTION	REMARK
R112	1-216-669-11	METAL CHIP 5.6K	0.50% 1/10W
R113	1-216-651-11	METAL CHIP 1K	0.50% 1/10W
R114	1-216-651-11	METAL CHIP 1K	0.50% 1/10W
R115	1-216-609-11	METAL CHIP 18	0.50% 1/10W
R116	1-216-637-11	METAL CHIP 270	0.50% 1/10W
R117	1-216-619-11	METAL CHIP 47	0.50% 1/10W
R118	1-216-641-11	METAL CHIP 390	0.50% 1/10W
R119	1-216-645-11	METAL CHIP 560	0.50% 1/10W
R120	1-216-643-11	METAL CHIP 470	0.50% 1/10W
R121	1-216-675-11	METAL CHIP 10K	0.50% 1/10W
R122	1-216-669-11	METAL CHIP 5.6K	0.50% 1/10W
R123	1-216-657-11	METAL CHIP 1.8K	0.50% 1/10W
R124	1-216-675-11	METAL CHIP 10K	0.50% 1/10W
R125	1-216-669-11	METAL CHIP 5.6K	0.50% 1/10W
R126	1-216-649-11	METAL CHIP 820	0.50% 1/10W
R127	1-216-633-11	METAL CHIP 180	0.50% 1/10W
R128	1-216-649-11	METAL CHIP 820	0.50% 1/10W
R129	1-216-619-11	METAL CHIP 47	0.50% 1/10W
R130	1-216-641-11	METAL CHIP 390	0.50% 1/10W
R131	1-216-637-11	METAL CHIP 270	0.50% 1/10W
R132	1-216-659-11	METAL CHIP 2.2K	0.50% 1/10W
R133	1-216-645-11	METAL CHIP 560	0.50% 1/10W
R134	1-216-643-11	METAL CHIP 470	0.50% 1/10W
R135	1-216-675-11	METAL CHIP 10K	0.50% 1/10W
R136	1-216-669-11	METAL CHIP 5.6K	0.50% 1/10W
R137	1-216-657-11	METAL CHIP 1.8K	0.50% 1/10W
R138	1-216-675-11	METAL CHIP 10K	0.50% 1/10W
R139	1-216-669-11	METAL CHIP 5.6K	0.50% 1/10W
R140	1-216-649-11	METAL CHIP 820	0.50% 1/10W
R141	1-216-667-11	METAL CHIP 4.7K	0.50% 1/10W
R142	1-216-667-11	METAL CHIP 4.7K	0.50% 1/10W
R143	1-216-667-11	METAL CHIP 4.7K	0.50% 1/10W
R144	1-216-639-11	METAL CHIP 330	0.50% 1/10W
R145	1-216-667-11	METAL CHIP 4.7K	0.50% 1/10W
R146	1-216-667-11	METAL CHIP 4.7K	0.50% 1/10W
R147	1-216-639-11	METAL CHIP 330	0.50% 1/10W
R148	1-216-669-11	METAL CHIP 5.6K	0.50% 1/10W
R149	1-216-669-11	METAL CHIP 5.6K	0.50% 1/10W
R150	1-216-651-11	METAL CHIP 1K	0.50% 1/10W
R151	1-216-651-11	METAL CHIP 1K	0.50% 1/10W
R152	1-216-619-11	METAL CHIP 47	0.50% 1/10W
R153	1-216-641-11	METAL CHIP 390	0.50% 1/10W
R154	1-216-295-91	SHORT 0	
R155	1-216-637-11	METAL CHIP 270	0.50% 1/10W
R156	1-216-645-11	METAL CHIP 560	0.50% 1/10W
R157	1-216-643-11	METAL CHIP 470	0.50% 1/10W
R158	1-216-675-11	METAL CHIP 10K	0.50% 1/10W
R159	1-216-669-11	METAL CHIP 5.6K	0.50% 1/10W
R160	1-216-657-11	METAL CHIP 1.8K	0.50% 1/10W
R161	1-218-776-11	METAL CHIP 1M	0.50% 1/10W
R162	1-218-776-11	METAL CHIP 1M	0.50% 1/10W
R163	1-218-776-11	METAL CHIP 1M	0.50% 1/10W
R164	1-216-627-11	METAL CHIP 100	0.50% 1/10W
R165	1-216-627-11	METAL CHIP 100	0.50% 1/10W
R166	1-216-619-11	METAL CHIP 47	0.50% 1/10W
R167	1-216-619-11	METAL CHIP 47	0.50% 1/10W
R168	1-216-619-11	METAL CHIP 47	0.50% 1/10W
R169	1-216-631-11	METAL CHIP 150	0.50% 1/10W
R170	1-216-631-11	METAL CHIP 150	0.50% 1/10W

Rf.NO.	PART NO.	DESCRIPTION			REMARK
R171	1-216-631-11	METAL CHIP	150	0.50% 1/10W	
R172	1-216-675-11	METAL CHIP	10K	0.50% 1/10W	
R173	1-216-675-11	METAL CHIP	10K	0.50% 1/10W	
R174	1-216-681-11	METAL CHIP	18K	0.50% 1/10W	
R175	1-216-657-11	METAL CHIP	1.8K	0.50% 1/10W	
R176	1-216-669-11	METAL CHIP	5.6K	0.50% 1/10W	
R177	1-216-675-11	METAL CHIP	10K	0.50% 1/10W	
R178	1-216-675-11	METAL CHIP	10K	0.50% 1/10W	
R179	1-216-675-11	METAL CHIP	10K	0.50% 1/10W	
R180	1-216-677-11	METAL CHIP	12K	0.50% 1/10W	
R181	1-216-651-11	METAL CHIP	1K	0.50% 1/10W	
R182	1-216-619-11	METAL CHIP	47	0.50% 1/10W	
R183	1-216-629-11	METAL CHIP	120	0.50% 1/10W	
R184	1-216-629-11	METAL CHIP	120	0.50% 1/10W	
R185	1-216-629-11	METAL CHIP	120	0.50% 1/10W	
R188	1-216-081-00	RES,CHIP	22K	5% 1/10W	
R191	1-216-699-11	METAL CHIP	100K	0.50% 1/10W	
R192	1-216-693-11	METAL CHIP	56K	0.50% 1/10W	
R193	1-216-695-11	METAL CHIP	68K	0.50% 1/10W	
R194	1-216-659-11	METAL CHIP	2.2K	0.50% 1/10W	
R195	1-216-651-11	METAL CHIP	1K	0.50% 1/10W	
R196	1-216-651-11	METAL CHIP	1K	0.50% 1/10W	
R197	1-216-679-11	METAL CHIP	15K	0.50% 1/10W	
R201	1-216-699-11	METAL CHIP	100K	0.50% 1/10W	
R202	1-216-693-11	METAL CHIP	56K	0.50% 1/10W	
R203	1-216-695-11	METAL CHIP	68K	0.50% 1/10W	
R204	1-216-659-11	METAL CHIP	2.2K	0.50% 1/10W	
R205	1-216-651-11	METAL CHIP	1K	0.50% 1/10W	
R206	1-216-651-11	METAL CHIP	1K	0.50% 1/10W	
R207	1-216-679-11	METAL CHIP	15K	0.50% 1/10W	

* A-1373-670-A UA BOARD, COMPLETE

<CAPACITOR>

C1101	1-126-382-11	ELECT	100MF	20%	6.3V
C1102	1-163-031-11	CERAMIC CHIP	0.01MF	50V	

<CONNECTOR>

CN1101	* 1-564-519-11	PLUG, CONNECTOR 4P	
CN1102	1-564-524-11	PLUG, CONNECTOR 9P	

<DIODE>

D1101	8-719-110-17	DIODE	RD10ESB2
D1102	8-719-110-17	DIODE	RD10ESB2
D1103	8-719-404-49	DIODE	MA111
D1111	8-719-150-92	DIODE	RD33EB3T
D1112	8-719-150-92	DIODE	RD33EB3T
D1113	8-719-150-92	DIODE	RD33EB3T
D1114	8-719-150-92	DIODE	RD33EB3T
D1115	8-719-110-17	DIODE	RD10ESB2
D1116	8-719-110-17	DIODE	RD10ESB2

<JACK>

J1101	1-573-969-11	JACK BLOCK, PIN
J1102	1-695-605-11	JACK, MINIATURE
J1103	1-695-605-11	JACK, MINIATURE

<COIL>

L1101	1-422-613-11	COIL, AIR CORE
L1102	1-422-613-11	COIL, AIR CORE
L1103	1-422-613-11	COIL, AIR CORE
L1104	1-422-613-11	COIL, AIR CORE

<TRANSISTOR>

Q1101	8-729-901-06	TRANSISTOR DTA144EK
Q1102	1-801-806-11	TRANSISTOR DTC144EK-T146
Q1103	8-729-120-28	TRANSISTOR 2SC1623-L5L6

<RESISTOR>

R1101	1-216-097-91	RES,CHIP	100K	5%	1/10W
R1102	1-216-097-91	RES,CHIP	100K	5%	1/10W
R1103	1-216-025-91	RES,CHIP	100	5%	1/10W
R1104	1-216-049-91	RES,CHIP	1K	5%	1/10W
R1105	1-216-049-91	RES,CHIP	1K	5%	1/10W
R1106	1-216-049-91	RES,CHIP	1K	5%	1/10W
R1107	1-216-057-00	RES,CHIP	2.2K	5%	1/10W
R1108	1-216-057-00	RES,CHIP	2.2K	5%	1/10W
R1111	1-216-025-91	RES,CHIP	100	5%	1/10W
R1112	1-216-025-91	RES,CHIP	100	5%	1/10W

<TERMINAL BOARD>

TB1101	1-537-187-11	TERMINAL, PUSH (4P)

* A-1373-671-A UJ BOARD, COMPLETE

<CAPACITOR>

C901	1-126-786-11	ELECT	47MF	20%	16V
C902	1-126-786-11	ELECT	47MF	20%	16V
C903	1-163-021-91	CERAMIC CHIP	0.01MF	10%	50V
C904	1-126-791-11	ELECT	10MF	20%	16V
C905	1-126-791-11	ELECT	10MF	20%	16V
C921	1-126-786-11	ELECT	47MF	20%	16V
C922	1-164-004-11	CERAMIC CHIP	0.1MF	10%	25V
C923	1-126-786-11	ELECT	47MF	20%	16V
C924	1-164-004-11	CERAMIC CHIP	0.1MF	10%	25V
C925	1-126-786-11	ELECT	47MF	20%	16V
C926	1-164-004-11	CERAMIC CHIP	0.1MF	10%	25V
C927	1-107-714-11	ELECT	10MF	20%	16V
C928	1-107-701-11	ELECT	47MF	20%	16V
C929	1-126-791-11	ELECT	10MF	20%	16V
C930	1-126-791-11	ELECT	10MF	20%	16V
C931	1-126-786-11	ELECT	47MF	20%	16V
C932	1-164-004-11	CERAMIC CHIP	0.1MF	10%	25V
C933	1-126-786-11	ELECT	47MF	20%	16V
C934	1-164-004-11	CERAMIC CHIP	0.1MF	10%	25V
C935	1-126-786-11	ELECT	47MF	20%	16V
C936	1-164-004-11	CERAMIC CHIP	0.1MF	10%	25V
C937	1-107-714-11	ELECT	10MF	20%	16V
C938	1-107-701-11	ELECT	47MF	20%	16V

Rf.NO.	PART NO.	DESCRIPTION	REMARK
C939	1-126-791-11	ELECT 10MF 20% 16V	
C940	1-126-791-11	ELECT 10MF 20% 16V	
C941	1-164-004-11	CERAMIC CHIP 0.1MF 10% 25V	
C951	1-165-319-11	CERAMIC CHIP 0.1MF 50V	
C952	1-126-786-11	ELECT 47MF 20% 16V	
C953	1-165-319-11	CERAMIC CHIP 0.1MF 50V	
C971	1-164-004-11	CERAMIC CHIP 0.1MF 10% 25V	
C972	1-164-004-11	CERAMIC CHIP 0.1MF 10% 25V	
C973	1-164-004-11	CERAMIC CHIP 0.1MF 10% 25V	
C974	1-126-786-11	ELECT 47MF 20% 16V	
C981	1-164-004-11	CERAMIC CHIP 0.1MF 10% 25V	
C982	1-164-004-11	CERAMIC CHIP 0.1MF 10% 25V	
C990	1-164-004-11	CERAMIC CHIP 0.1MF 10% 25V	
C991	1-164-004-11	CERAMIC CHIP 0.1MF 10% 25V	
		<CONNECTOR>	
CN901	1-506-485-11	PIN, CONNECTOR 6P	
CN902	1-506-494-11	PIN, CONNECTOR 15P	
CN903	1-506-491-11	PIN, CONNECTOR 12P	
CN905	1-750-628-11	SOCKET, DIN 8P	
		<DIODE>	
D901	8-719-402-16	DIODE MA3100-TX	
D902	8-719-402-16	DIODE MA3100-TX	
D903	8-719-402-16	DIODE MA3100-TX	
D904	8-719-402-16	DIODE MA3100-TX	
D905	8-719-402-16	DIODE MA3100-TX	
D921	8-719-800-76	DIODE 1SS226	
D922	8-719-800-76	DIODE 1SS226	
D923	8-719-800-76	DIODE 1SS226	
D926	8-719-402-16	DIODE MA3100-TX	
D927	8-719-402-16	DIODE MA3100-TX	
D928	8-719-800-76	DIODE 1SS226	
D929	8-719-800-76	DIODE 1SS226	
D930	8-719-800-76	DIODE 1SS226	
D933	8-719-402-16	DIODE MA3100-TX	
D934	8-719-402-16	DIODE MA3100-TX	
D940	8-719-976-96	DIODE DTZ4.7C	
D941	8-719-976-96	DIODE DTZ4.7C	
D942	8-719-976-96	DIODE DTZ4.7C	
D943	8-719-976-96	DIODE DTZ4.7C	
D944	8-719-976-96	DIODE DTZ4.7C	
D945	8-719-976-96	DIODE DTZ4.7C	
D946	8-719-976-96	DIODE DTZ4.7C	
D947	8-719-976-96	DIODE DTZ4.7C	
D951	8-719-402-16	DIODE MA3100-TX	
D952	8-719-402-16	DIODE MA3100-TX	
		<IC>	
IC903	8-759-446-66	IC MM1113XFBE	
IC904	8-759-446-66	IC MM1113XFBE	
IC905	8-759-360-07	IC BA7657F-E2	
IC906	8-759-011-64	IC MC74HC4052F	
		<JACK>	
J901	1-694-453-11	TERMINAL BOARD ASSY, I/O	
J903	1-569-578-11	TERMINAL, S (WITH SW)	
J905	1-694-452-11	TERMINAL BOARD ASSY, I/O	
		<TRANSISTOR>	
Q901	8-729-027-38	TRANSISTOR DTA144EKA-T146	
Q902	8-729-027-38	TRANSISTOR DTA144EKA-T146	
Q903	8-729-027-38	TRANSISTOR DTA144EKA-T146	
Q904	1-801-806-11	TRANSISTOR DTC144EKA-T146	
Q905	8-729-120-28	TRANSISTOR 2SC1623-L5L6	
Q906	8-729-120-28	TRANSISTOR 2SC1623-L5L6	
		<RESISTOR>	
R901	1-216-295-91	SHORT 0	
R902	1-216-295-91	SHORT 0	
R903	1-216-025-91	RES,CHIP 100 5% 1/10W	
R905	1-215-394-00	METAL 75 1% 1/4W	
R906	1-216-624-11	METAL CHIP 75 0.50% 1/10W	
R907	1-216-089-91	RES,CHIP 47K 5% 1/10W	
R909	1-216-089-91	RES,CHIP 47K 5% 1/10W	
R915	1-216-624-11	METAL CHIP 75 0.50% 1/10W	
R916	1-216-624-11	METAL CHIP 75 0.50% 1/10W	
R917	1-216-624-11	METAL CHIP 75 0.50% 1/10W	
R918	1-216-057-00	RES,CHIP 2.2K 5% 1/10W	
R919	1-216-033-00	RES,CHIP 220 5% 1/10W	
R921	1-216-057-00	RES,CHIP 2.2K 5% 1/10W	
R922	1-216-033-00	RES,CHIP 220 5% 1/10W	
R924	1-216-089-91	RES,CHIP 47K 5% 1/10W	
R926	1-216-089-91	RES,CHIP 47K 5% 1/10W	
R928	1-216-624-11	METAL CHIP 75 0.50% 1/10W	
R929	1-216-624-11	METAL CHIP 75 0.50% 1/10W	
R930	1-216-624-11	METAL CHIP 75 0.50% 1/10W	
R931	1-216-057-00	RES,CHIP 2.2K 5% 1/10W	
R932	1-216-033-00	RES,CHIP 220 5% 1/10W	
R934	1-216-057-00	RES,CHIP 2.2K 5% 1/10W	
R935	1-216-033-00	RES,CHIP 220 5% 1/10W	
R937	1-216-089-91	RES,CHIP 47K 5% 1/10W	
R939	1-216-089-91	RES,CHIP 47K 5% 1/10W	
R941	1-216-081-00	RES,CHIP 22K 5% 1/10W	
R942	1-216-081-00	RES,CHIP 22K 5% 1/10W	
R943	1-216-121-91	RES,CHIP 1M 5% 1/10W	
R944	1-216-121-91	RES,CHIP 1M 5% 1/10W	
R945	1-216-121-91	RES,CHIP 1M 5% 1/10W	
R946	1-216-295-91	SHORT 0	
R947	1-216-295-91	SHORT 0	
R948	1-216-295-91	SHORT 0	
R949	1-216-073-00	RES,CHIP 10K 5% 1/10W	
R950	1-216-073-00	RES,CHIP 10K 5% 1/10W	
R951	1-216-073-00	RES,CHIP 10K 5% 1/10W	
R952	1-216-073-00	RES,CHIP 10K 5% 1/10W	
R971	1-216-073-00	RES,CHIP 10K 5% 1/10W	
R985	1-216-025-91	RES,CHIP 100 5% 1/10W	
R986	1-216-025-91	RES,CHIP 100 5% 1/10W	
R987	1-216-295-91	SHORT 0	
R988	1-216-295-91	SHORT 0	
R990	1-216-295-91	SHORT 0	
R991	1-215-394-00	METAL 75 1% 1/4W	
R995	1-216-025-91	RES,CHIP 100 5% 1/10W	

Ref.NO.	PART NO.	DESCRIPTION			REMARK
R996	1-216-025-91	RES,CHIP 100	5%	1/10W	

* A-1380-574-A K BOARD, COMPLETE

7-682-949-09 SCREW +PSW 3X10

<CAPACITOR>

C501	1-104-664-11	ELECT	47MF	20%	16V
C502	1-163-035-00	CERAMIC CHIP	0.047MF	50V	
C503	1-126-394-11	ELECT CHIP	10MF	20%	16V
C504	1-126-394-11	ELECT CHIP	10MF	20%	16V
C505	1-163-017-00	CERAMIC CHIP	0.0047MF	10%	50V
C506	1-163-017-00	CERAMIC CHIP	0.0047MF	10%	50V
C507	1-164-004-11	CERAMIC CHIP	0.1MF	10%	25V
C508	1-164-004-11	CERAMIC CHIP	0.1MF	10%	25V
C509	1-126-394-11	ELECT CHIP	10MF	20%	16V
C510	1-126-394-11	ELECT CHIP	10MF	20%	16V
C511	1-126-401-11	ELECT CHIP	1MF	20%	50V
C512	1-126-398-11	ELECT CHIP	47MF	20%	16V
C513	1-126-401-11	ELECT CHIP	1MF	20%	50V
C514	1-126-401-11	ELECT CHIP	1MF	20%	50V
C515	1-163-809-11	CERAMIC CHIP	0.047MF	10%	25V
C516	1-126-401-11	ELECT CHIP	1MF	20%	50V
C517	1-126-398-11	ELECT CHIP	4.7MF	20%	35V
C518	1-126-964-11	ELECT	10MF	20%	50V
C519	1-126-964-11	ELECT	10MF	20%	50V
C520	1-126-964-11	ELECT	10MF	20%	50V
C521	1-126-964-11	ELECT	10MF	20%	50V
C522	1-126-953-11	ELECT	2200MF	20%	35V
C523	1-107-909-11	ELECT	47MF	20%	35V
C524	1-126-964-11	ELECT	10MF	20%	50V
C525	1-126-964-11	ELECT	10MF	20%	50V
C526	1-126-947-11	ELECT	47MF	20%	35V
C527	1-126-947-11	ELECT	47MF	20%	35V
C528	1-126-947-11	ELECT	47MF	20%	35V
C529	1-126-953-11	ELECT	2200MF	20%	35V
C530	1-126-953-11	ELECT	2200MF	20%	35V
C531	1-136-165-00	FILM	0.1MF	5%	50V
C532	1-136-165-00	FILM	0.1MF	5%	50V
C533	1-163-009-11	CERAMIC CHIP	0.001MF	10%	50V
C534	1-163-009-11	CERAMIC CHIP	0.001MF	10%	50V
C535	1-163-133-00	CERAMIC CHIP	470PF	5%	50V
C536	1-163-133-00	CERAMIC CHIP	470PF	5%	50V
C537	1-126-964-11	ELECT	10MF	20%	50V
C538	1-104-664-11	ELECT	47MF	20%	16V
C539	1-104-664-11	ELECT	47MF	20%	16V

<CONNECTOR>

CN501	1-506-472-11	PIN, CONNECTOR 7P
CN502	1-506-469-11	PIN, CONNECTOR 4P
CN503	1-506-474-11	PIN, CONNECTOR 9P

<DIODE>

D501	8-719-404-49	DIODE MA111
D502	8-719-110-83	DIODE RD36ESB2
D503	8-719-510-48	DIODE D1N20R

Ref.NO.	PART NO.	DESCRIPTION			REMARK
D504	8-719-510-48	DIODE D1N20R			

<IC>

IC501	8-759-346-93	IC TA8184F(EL)
IC502	8-759-168-24	IC TA8200AH

<COIL>

L501	1-408-615-31	INDUCTOR	100UH

<TRANSISTOR>

Q501	8-729-120-28	TRANSISTOR 2SC1623-L5L6
Q502	8-729-120-28	TRANSISTOR 2SC1623-L5L6
Q503	8-729-120-28	TRANSISTOR 2SC1623-L5L6
Q504	8-729-120-28	TRANSISTOR 2SC1623-L5L6
Q505	8-729-120-28	TRANSISTOR 2SC1623-L5L6

<RESISTOR>

R501	1-216-033-00	RES,CHIP	220	5%	1/10W
R502	1-216-033-00	RES,CHIP	220	5%	1/10W
R503	1-216-049-91	RES,CHIP	1K	5%	1/10W
R504	1-216-061-00	RES,CHIP	22K	5%	1/10W
R505	1-216-097-91	RES,CHIP	100K	5%	1/10W
R506	1-216-063-91	RES,CHIP	3.9K	5%	1/10W
R507	1-216-061-00	RES,CHIP	22K	5%	1/10W
R508	1-216-061-00	RES,CHIP	22K	5%	1/10W
R509	1-216-063-91	RES,CHIP	3.9K	5%	1/10W
R510	1-216-081-00	RES,CHIP	22K	5%	1/10W
R511	1-216-081-00	RES,CHIP	22K	5%	1/10W
R512	1-216-089-91	RES,CHIP	47K	5%	1/10W
R513	1-216-089-91	RES,CHIP	47K	5%	1/10W
R514	1-216-081-00	RES,CHIP	22K	5%	1/10W
R515	1-216-061-00	RES,CHIP	3.3K	5%	1/10W
R516	1-216-061-00	RES,CHIP	3.3K	5%	1/10W
R517	1-216-033-00	RES,CHIP	220	5%	1/10W
R518	1-216-033-00	RES,CHIP	220	5%	1/10W
R519	1-216-019-00	RES,CHIP	56	5%	1/10W
R520	1-216-065-91	RES,CHIP	4.7K	5%	1/10W
R521	1-216-065-91	RES,CHIP	4.7K	5%	1/10W
R522	1-216-019-00	RES,CHIP	56	5%	1/10W
R523	1-216-097-91	RES,CHIP	100K	5%	1/10W
R524	1-249-385-11	CARBON	2.2	5%	1/4W F
R525	1-216-097-91	RES,CHIP	100K	5%	1/10W
R526	1-216-097-91	RES,CHIP	100K	5%	1/10W
R527	1-249-385-11	CARBON	2.2	5%	1/4W F
R528	1-216-081-00	RES,CHIP	22K	5%	1/10W
R529	1-216-081-00	RES,CHIP	22K	5%	1/10W

* A-1390-878-A S1 BOARD, COMPLETE

<CAPACITOR>

C1201	1-126-392-11	ELECT CHIP	100MF	20%	6.3V
C1202	1-163-021-91	CERAMIC CHIP	0.01MF	10%	50V
C1203	1-163-021-91	CERAMIC CHIP	0.01MF	10%	50V

S1 H5 AF UJ

Rf.NO.	PART NO.	DESCRIPTION			REMARK
C1204	1-163-021-91	CERAMIC CHIP	0.01MF	10%	50V
C1205	1-163-021-91	CERAMIC CHIP	0.01MF	10%	50V
C1206	1-126-933-11	ELECT	100MF	20%	16V
C1207	1-136-177-00	FILM	1MF	5%	50V
C1208	1-164-004-11	CERAMIC CHIP	0.1MF	10%	25V
C1210	1-163-021-91	CERAMIC CHIP	0.01MF	10%	50V
		<CONNECTOR>			
CN1201	1-506-472-11	PIN, CONNECTOR 7P			
CN1202	1-506-468-11	PIN, CONNECTOR 3P			
		<IC>			
IC1201	8-759-947-34	IC LM35DZ			
IC1202	8-759-510-71	IC BA10068F-E2			
IC1203	8-759-196-31	IC UPC1093J-1-T			
IC1204	8-759-981-48	IC TL082M			
		<RESISTOR>			
R1201	1-216-627-11	METAL CHIP	100	0.50%	1/10W
R1202	1-216-659-11	METAL CHIP	2.2K	0.50%	1/10W
R1203	1-216-671-11	METAL CHIP	6.8K	0.50%	1/10W
R1204	1-216-025-91	RES,CHIP	100	5%	1/10W
R1205	1-216-065-91	RES,CHIP	4.7K	5%	1/10W
R1208	1-218-770-11	METAL CHIP	560K	0.50%	1/10W
R1210	1-216-295-91	SHORT	0		
R1212	1-216-295-91	SHORT	0		

A-1372-454-A H5 BOARD, COMPLETE

< CONNECTOR >

CN201	1-774-525-11	SOCKET, CONNECTOR 64P			
CN202	1-774-525-11	SOCKET, CONNECTOR 64P			
CN203	1-569-922-11	SOCKET, CONNECTOR30P			
CN204	1-569-922-11	SOCKET, CONNECTOR30P			
CN205	1-569-922-11	SOCKET, CONNECTOR30P			
CN206	1-506-485-11	PIN, CONNECTOR 6P			
CN207	1-506-485-11	PIN, CONNECTOR 6P			

A-1294-154-A AF BOARD, COMPLETE

< CAPACITOR >

C6501	1-126-392-11	ELECT CHIP	100MF	20%	6.3V
C6502	1-164-004-11	CERAMIC CHIP	0.1MF	10%	25V
C6503	1-164-004-11	CERAMIC CHIP	0.1MF	10%	25V
		< CONNECTOR >			
CN6501	1-506-484-11	PIN, CONNECTOR 5P			
		< IC >			
IC6501	8-759-032-59	IC MC74HC595AF			
IC6502	8-759-032-59	IC MC74HC595AF			
IC6503	8-719-045-58	DIODE LB-602MA2			

Rf.NO.	PART NO.	DESCRIPTION			REMARK
		< RESISTOR >			
R6501	1-216-039-00	RES, CHIP	390	5%	1/10W
R6502	1-216-039-00	RES, CHIP	390	5%	1/10W
R6503	1-216-039-00	RES, CHIP	390	5%	1/10W
R6504	1-216-039-00	RES, CHIP	390	5%	1/10W
R6505	1-216-039-00	RES, CHIP	390	5%	1/10W
R6506	1-216-039-00	RES, CHIP	390	5%	1/10W
R6507	1-216-039-00	RES, CHIP	390	5%	1/10W
R6508	1-216-039-00	RES, CHIP	390	5%	1/10W
R6509	1-216-039-00	RES, CHIP	390	5%	1/10W
R6510	1-216-039-00	RES, CHIP	390	5%	1/10W
R6511	1-216-039-00	RES, CHIP	390	5%	1/10W
R6512	1-216-039-00	RES, CHIP	390	5%	1/10W
R6513	1-216-039-00	RES, CHIP	390	5%	1/10W
R6514	1-216-039-00	RES, CHIP	390	5%	1/10W
R6515	1-216-039-00	RES, CHIP	390	5%	1/10W
R6516	1-216-039-00	RES, CHIP	390	5%	1/10W

A-1373-671-A UJ BOARD, COMPLETE

< CAPACITOR >

C901	1-126-786-11	ELECT	47MF	20%	16V
C902	1-126-786-11	ELECT	47MF	20%	16V
C903	1-164-232-11	CERAMIC, CHIP	0.01MF	10%	50V
C904	1-126-791-11	ELECT	10MF	20%	16V
C905	1-126-791-11	ELECT	10MF	20%	16V
C921	1-126-786-11	ELECT	47MF	20%	16V
C922	1-164-004-11	CERAMIC, CHIP	0.1MF	10%	25V
C923	1-126-786-11	ELECT	47MF	20%	16V
C924	1-164-004-11	CERAMIC, CHIP	0.1MF	10%	25V
C925	1-126-786-11	ELECT	47MF	20%	16V
C926	1-164-004-11	CERAMIC, CHIP	0.1MF	10%	25V
C927	1-107-714-11	ELECT	10MF	20%	16V
C928	1-107-701-11	ELECT	47MF	20%	16V
C929	1-126-791-11	ELECT	10MF	20%	16V
C930	1-126-791-11	ELECT	10MF	20%	16V
C931					
C932	1-164-004-11	CERAMIC, CHIP	0.1MF	10%	25V
C933	1-126-786-11	ELECT	47MF	20%	16V
C934	1-164-004-11	CERAMIC, CHIP	0.1MF	10%	25V
C935	1-126-786-11	ELECT	47MF	20%	16V
C936	1-164-004-11	CERAMIC, CHIP	0.1MF	10%	25V
C937	1-107-714-11	ELECT	10MF	20%	16V
C938	1-107-701-11	ELECT	47MF	20%	16V
C939	1-126-791-11	ELECT	10MF	20%	16V
C940	1-126-791-11	ELECT	10MF	20%	16V
C941	1-164-004-11	CERAMIC, CHIP	0.1MF	10%	25V
C951	1-165-319-11	CERAMIC, CHIP	0.1MF		50V
C952	1-126-786-11	ELECT	47MF	20%	16V
C953	1-165-319-11	CERAMIC, CHIP	0.1MF		50V
C971	1-164-004-11	CERAMIC, CHIP	0.1MF	10%	25V
C972	1-164-004-11	CERAMIC, CHIP	0.1MF	10%	25V
C973	1-164-004-11	CERAMIC, CHIP	0.1MF	10%	25V
C974	1-126-786-11	ELECT	47MF	20%	16V
C981	1-164-004-11	CERAMIC, CHIP	0.1MF	10%	25V
C982	1-164-004-11	CERAMIC, CHIP	0.1MF	10%	25V

Rf.NO.	PART NO.	DESCRIPTION			REMARK
C990	1-164-004-11	CERAMIC, CHIP 0.1MF	10%	25V	
C991	1-164-004-11	CERAMIC, CHIP 0.1MF	10%	25V	
		< CONNECTOR >			
CN901	1-506-485-11	PIN, CONNECTOR 6P			
CN902	1-506-494-11	PIN, CONNECTOR15P			
CN903	1-506-491-11	PIN, CONNECTOR12P			
CN905	1-750-629-11	SOCKET, DIN 8P			
		< DIODE >			
D901	8-719-402-16	DIODE MA3100-TX			
D902	8-719-402-16	DIODE MA3100-TX			
D903	8-719-402-16	DIODE MA3100-TX			
D904	8-719-402-16	DIODE MA3100-TX			
D905	8-719-402-16	DIODE MA3100-TX			
D921	8-719-800-76	DIODE 1SS226			
D922	8-719-800-76	DIODE 1SS226			
D923	8-719-800-76	DIODE 1SS226			
D926	8-719-402-16	DIODE MA3100-TX			
D927	8-719-402-16	DIODE MA3100-TX			
D928	8-719-800-76	DIODE 1SS226			
D929	8-719-800-76	DIODE 1SS226			
D930	8-719-800-76	DIODE 1SS226			
D933	8-719-402-16	DIODE MA3100-TX			
D934	8-719-402-16	DIODE MA3100-TX			
D940	8-719-976-96	DIODE DTZ4.7C			
D941	8-719-976-96	DIODE DTZ4.7C			
D942	8-719-976-96	DIODE DTZ4.7C			
D943	8-719-976-96	DIODE DTZ4.7C			
D944	8-719-976-96	DIODE DTZ4.7C			
D945	8-719-976-96	DIODE DTZ4.7C			
D946	8-719-976-96	DIODE DTZ4.7C			
D947	8-719-976-96	DIODE DTZ4.7C			
D951	8-719-402-16	DIODE MA3100-TX			
D952	8-719-402-16	DIODE MA3100-TX			
		< IC >			
IC903	8-759-446-66	IC MM1113XFBE			
IC904	8-759-446-66	IC MM1113XFBE			
IC905	8-759-360-07	IC BA7657F-E2			
IC906	8-759-011-64	IC MC74HC4052F			
		< JACK >			
J901	1-694-453-11	TERMINAL BOARD ASSY, I/O			
J903	1-569-578-11	TERMINAL, S (WITH SW)			
J905	1-694-452-11	TERMINAL BOARD ASSY, I/O			
		< TRANSISTOR >			
Q901	8-729-027-38	TRANSISTOR DTA144EKA-T146			
Q902	8-729-027-38	TRANSISTOR DTA144EKA-T146			
Q903	8-729-027-38	TRANSISTOR DTA144EKA-T146			
Q904	1-801-806-11	TRANSISTOR DTC144EKA-T146			
Q905	8-729-120-28	TRANSISTOR 2SC2412K-T-146-QR			
Q906	8-729-120-28	TRANSISTOR 2SC2412K-T-146-QR			
		< RESISTOR >			
R901	1-216-025-91	RES, CHIP	100	5%	1/10W
R902	1-216-025-91	RES, CHIP	100	5%	1/10W
R903	1-216-025-91	RES, CHIP	100	5%	1/10W
R905	1-215-394-00	METAL	75	1%	1/4W

Rf.NO.	PART NO.	DESCRIPTION			REMARK
R906	1-216-624-11	METAL CHIP	75	0.50%	1/10W
R907	1-216-089-91	RES, CHIP	47K	5%	1/10W
R909	1-216-089-91	RES, CHIP	47K	5%	1/10W
R915	1-216-624-11	METAL CHIP	75	0.50%	1/10W
R916	1-216-624-11	METAL CHIP	75	0.50%	1/10W
R917	1-216-624-11	METAL CHIP	75	0.50%	1/10W
R918	1-216-057-00	RES, CHIP	2.2K	5%	1/10W
R919	1-216-033-00	RES, CHIP	220	5%	1/10W
R921	1-216-057-00	RES, CHIP	2.2K	5%	1/10W
R922	1-216-033-00	RES, CHIP	220	5%	1/10W
R924	1-216-089-91	RES, CHIP	47K	5%	1/10W
R926	1-216-089-91	RES, CHIP	47K	5%	1/10W
R928	1-216-624-11	METAL CHIP	75	0.50%	1/10W
R929	1-216-624-11	METAL CHIP	75	0.50%	1/10W
R930	1-216-624-11	METAL CHIP	75	0.50%	1/10W
R931	1-216-057-00	RES, CHIP	2.2K	5%	1/10W
R932	1-216-033-00	RES, CHIP	220	5%	1/10W
R934	1-216-057-00	RES, CHIP	2.2K	5%	1/10W
R935	1-216-033-00	RES, CHIP	220	5%	1/10W
R937	1-216-089-91	RES, CHIP	47K	5%	1/10W
R939	1-216-089-91	RES, CHIP	47K	5%	1/10W
R941	1-216-081-00	RES, CHIP	22K	5%	1/10W
R942	1-216-081-00	RES, CHIP	22K	5%	1/10W
R943	1-216-121-91	RES, CHIP	1M	5%	1/10W
R944	1-216-121-91	RES, CHIP	1M	5%	1/10W
R945	1-216-121-91	RES, CHIP	1M	5%	1/10W
R946	1-216-295-91	SHORT	0		
R947	1-216-295-91	SHORT	0		
R948	1-216-295-91	SHORT	0		
R949	1-216-073-00	RES, CHIP	10K	5%	1/10W
R950	1-216-073-00	RES, CHIP	10K	5%	1/10W
R951	1-216-073-00	RES, CHIP	10K	5%	1/10W
R952	1-216-073-00	RES, CHIP	10K	5%	1/10W
R971	1-216-073-00	RES, CHIP	10K	5%	1/10W
R985	1-216-025-91	RES, CHIP	100	5%	1/10W
R986	1-216-025-91	RES, CHIP	100	5%	1/10W
R987	1-216-295-91	SHORT	0		
R988	1-216-295-91	SHORT	0		
R990	1-216-295-91	SHORT	0		
R991	1-215-394-00	METAL	75	1%	1/4W
R995					
R996	1-216-025-91	RES, CHIP	100	5%	1/10W

REMOTE COMMANDER

1-475-089-11	REMOTE COMMANDER (RM-921)	
9-900-029-01	BATTERY COVER (FOR RM-921)	

SECTION 8
BLOCK DIAGRAM

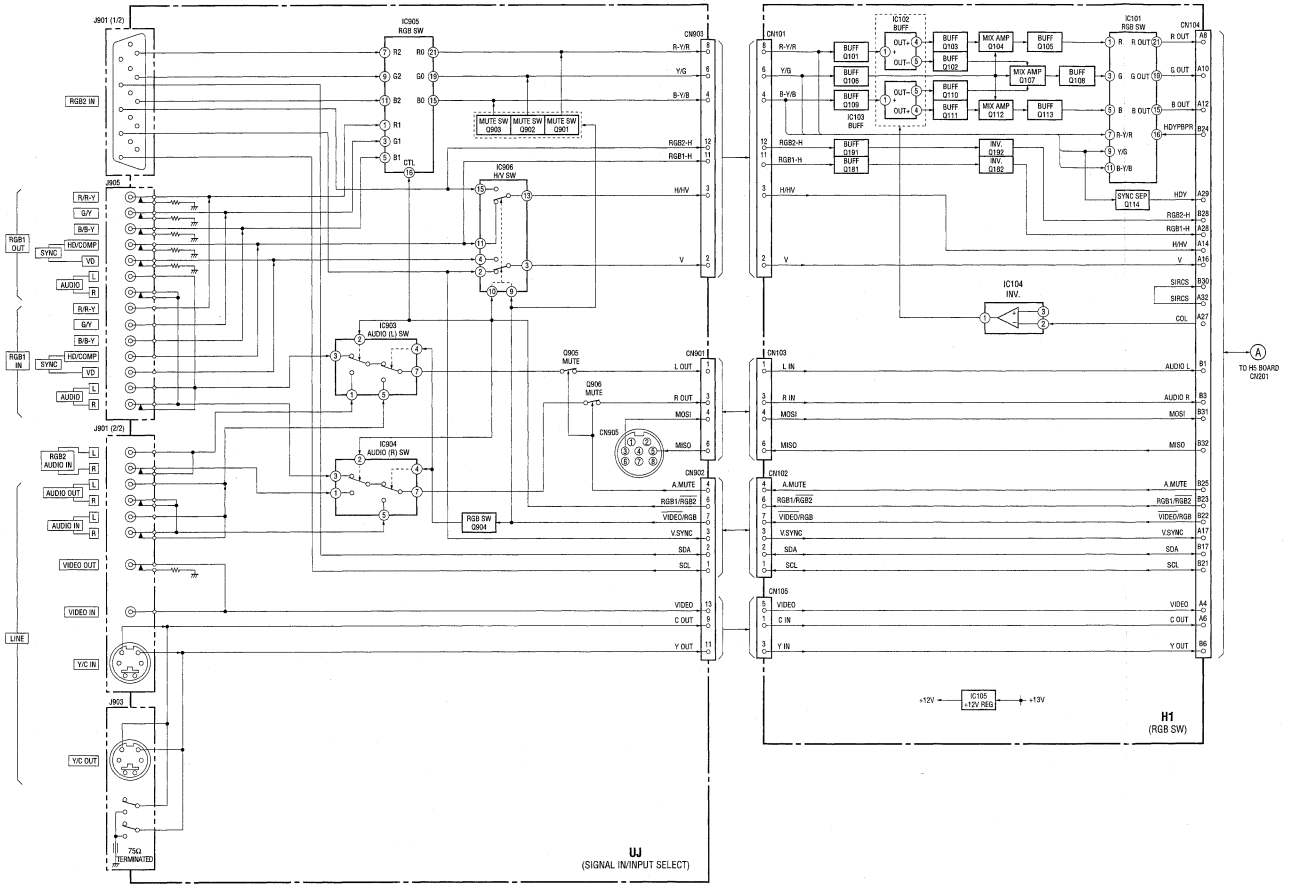

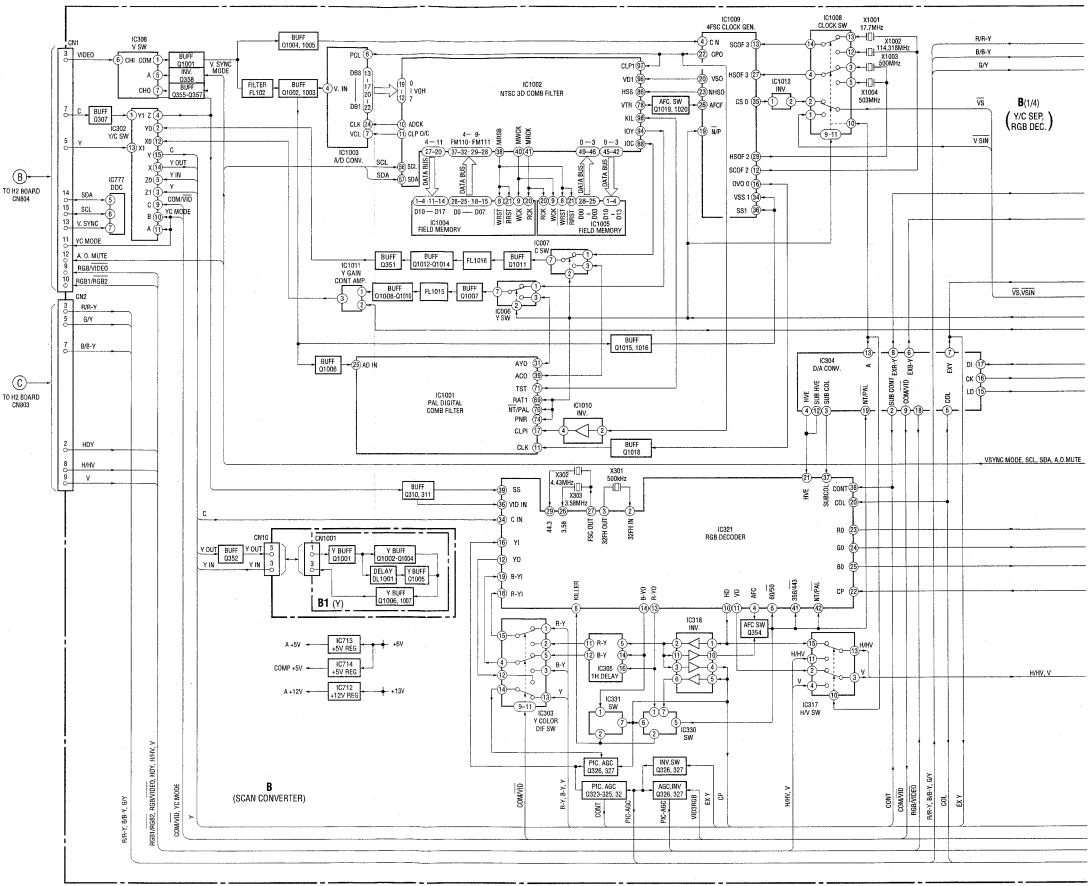
B
(SCAN CONVERTER)
B1 (Y)
B(1/4)
(Y/C SEP.
RGB DEC.)
IC1009
4FSC CLOCK GEN.
IC1008
CLOCK SW
X1001
17.7MHz
X1002
14.318MHz
X1003
50MHz
X1004
503MHz
IC1002
NTSC 3D COMB FILTER
IC1003
A/D CONV.
IC1004
FIELD MEMORY
IC1005
FIELD MEMORY
IC1001
PAL DIGITAL
COMB FILTER
IC1010
INV.
IC1011
Y GAIN
CONT AMP.
IC1007
C SW
IC1006
Y SW
IC1012
INV.
IC1013
INV.
IC1014
INV.
IC1015
INV.
IC1016
INV.
IC1017
INV.
IC1018
INV.
IC1019
INV.
IC1020
INV.
IC1021
INV.
IC1022
INV.
IC1023
INV.
IC1024
INV.
IC1025
INV.
IC1026
INV.
IC1027
INV.
IC1028
INV.
IC1029
INV.
IC1030
INV.
IC1031
INV.

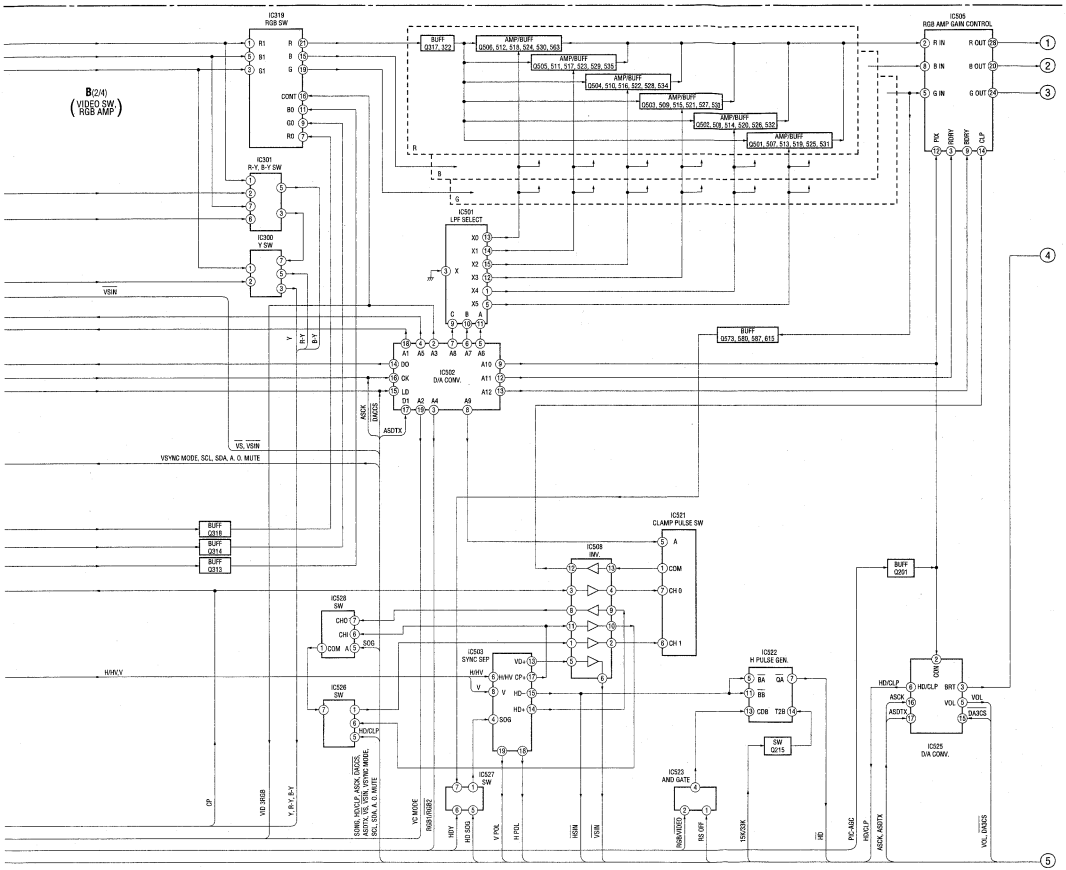
B(2/4)
(VIDEO SW. RGB AMP)
IC319
RGB SW
IC301
R-Y, B-Y SW
IC300
Y SW
IC505
RGB AMP GAIN CONTROL
IC501
LPF SELECT
IC502
D/A CONV.
IC521
CLAMP PULSE SW
IC508
INV.
IC528
SW
IC526
SW
IC503
SYNC SEP
IC527
SW
IC522
H PULSE GEN.
IC523
AND GATE
IC525
D/A CONV.
VSIN
VSYNC MODE, SCL, SDA, A. O. MUTE
H/HV,V
VID 3RGB
Y, R-Y, B-Y
VC MODE
RGB/VIDEO
HD SOG
V POL
H POL
HSIN
VSIN
RGB/VIDEO
RS OFF
15KX33K
HD
PIC-AGC
HD/CLP
ASCK, ASDTX
VOL, DA3CS

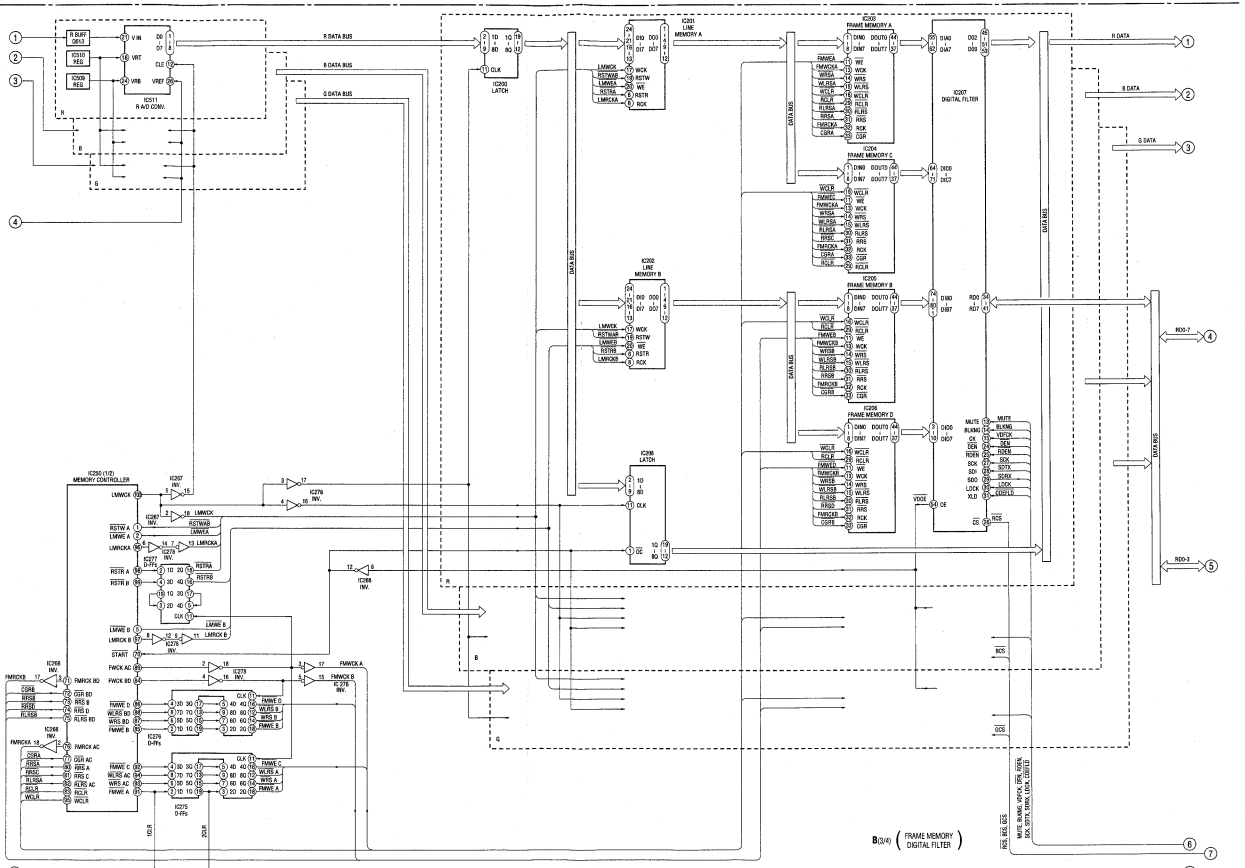
R DATA BUS
B DATA BUS
G DATA BUS
IC310 R A/D CONV.
IC200 LATCH
IC201 LINE MEMORY A
IC202 LINE MEMORY B
IC203 FRAME MEMORY A
IC204 FRAME MEMORY C
IC205 FRAME MEMORY B
IC206 FRAME MEMORY D
IC207 DIGITAL FILTER
IC296 LATCH
IC250 (1/2) MEMORY CONTROLLER
DATA BUS
R DATA
B DATA
G DATA
RD0-7
RD0-3
B(3/4) (FRAME MEMORY DIGITAL FILTER)

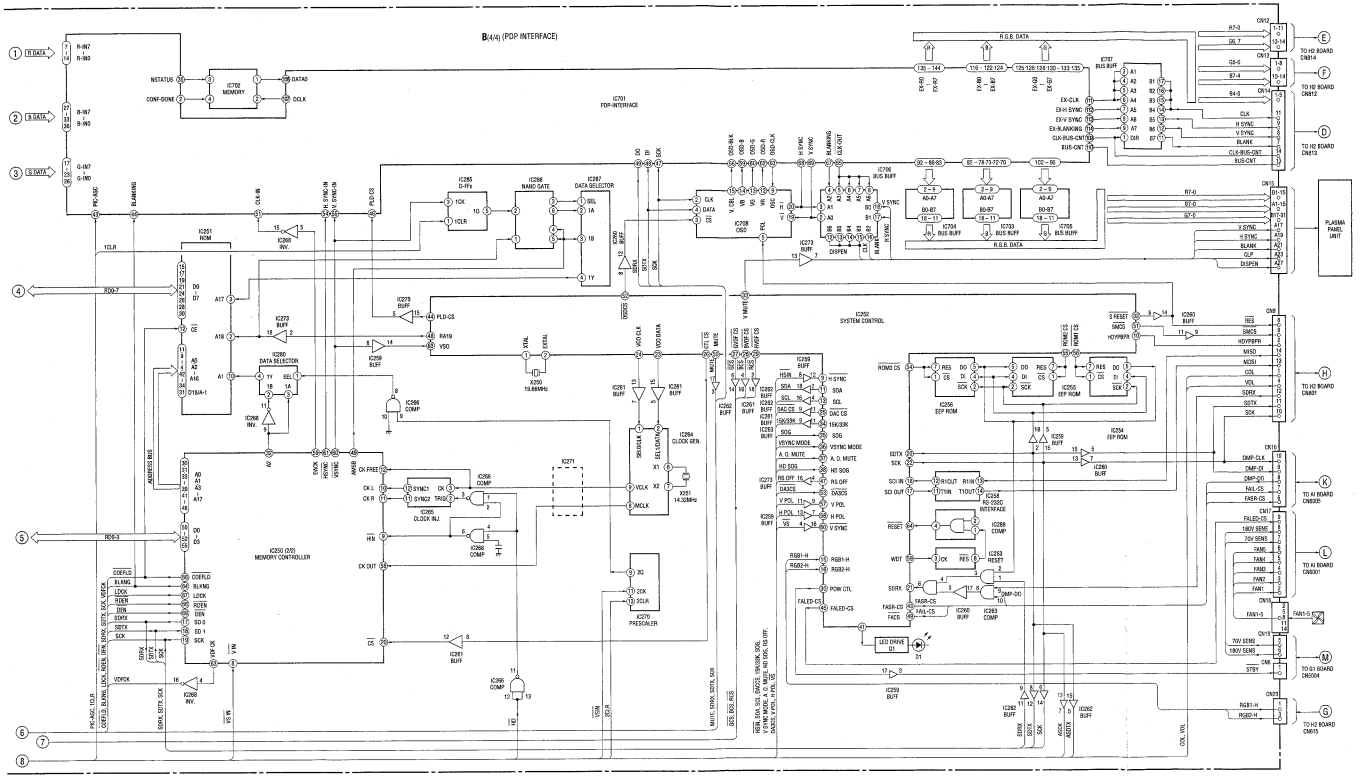
B (4/4) (POP INTERFACE)
R.G.B. DATA
IC701 POP-INTERFACE
IC702 MEMORY
IC797 BUS BUFF
IC706 BUS BUFF
IC704 BUS BUFF
IC703 BUS BUFF
IC705 BUS BUFF
IC285 D-FFs
IC286 NAND GATE
IC287 DATA SELECTOR
IC708 VSO
IC273 BUFF
DISPEN
IC251 ROM
IC260 INV.
IC279 BUFF
IC259 BUFF
IC266 DATA SELECTOR
IC269 INV.
IC266 COMP
IC265 CLOCK INJ.
IC271
IC259 (2/2) MEMORY CONTROLLER
IC396 COMP
IC281 BUFF
IC270 PRESCALER
X250 19.66MHz
X251 14.318MHz
IC264 CLOCK GEN.
IC261 BUFF
IC262 BUFF
IC252 SYSTEM CONTROL
IC256 EEP ROM
IC255 EEP ROM
IC254 EEP ROM
IC290 BUFF
IC258 RS-232C INTERFACE
IC288 COMP
IC253 RESET
IC260 BUFF
IC263 COMP
IC259 BUFF
IC262 BUFF
LED DRIVE Q1
D1
PLASMA PANEL UNIT
TO H2 BOARD CN814
TO H2 BOARD CN812
TO H2 BOARD CN813
TO H2 BOARD CN801
TO A1 BOARD CN9320
TO A1 BOARD CN9301
TO G1 BOARD CN9504
TO H2 BOARD CN815
R-IN7 R-IN0
G-IN7 G-IN0
B-IN7 B-IN0
R7-0
G7-0
B7-0
EX-R0 EX-R7
EX-A0 EX-A7
EX-G0 EX-G7
EX-CLK
EX-H SYNC
EX-V SYNC
EX-BLANKING
CLK-BUS-CNT
BUS-CNT
H SYNC
V SYNC
BLANK
CLP
DISPEN
PLD-CS
XTAL
VSO CLK
VSO DATA
SDA
SCL
DAC CS
15K/33K
SDG
VSYNC MODE
A. G. MUTE
HD SDG
RS OFF
DASCS
V POL
H POL
V SYNC
RGB1-H
RGB2-H
POW CTL
FAILED-CS
FASR-CS
FAIL-CS
FACS
RESET
WDT
SDRX
SDTX
SCK
R1OUT
T1OUT
R1IN
T1IN
DMP-CLK
DMP-DI
DMP-DO
FAIL-CS
FASR-CS
FAIL-1
FAIL-2
FAIL-3
FAIL-4
FAIL-5
70V SENS
180V SENS
STBY
RGB1-H
RGB2-H
ADDRESS BUS
RDY-7
RDY-3
CODFLD
BLANK
LOCK
RDEN
DRN
SDTX
SCK
SD 0
SD 1
VDPCK
HP
VP
CK FREE
CK L
CK R
CK OUT
HIN
VIN
CS
VCLK
MCLK
X1
X2
2CK
2CLR
PIC-AGC
CLK-IN
IN SYNC-IN
V SYNC-IN
BLANKING
1CLR
2CK
VSYNC
HSYNC
BLANKING
CLK-OUT
SDO
SDI
SDTX
SCK
VSYNC
HSYNC
BLANKING
R7-0
G7-0
B7-0
V SYNC
H SYNC
BLANK
CLP
DISPEN
RES
SMOS
HDYPBPR
MISO
MOSI
VDL
SDRX
SDTX
SCK
DMP-CLK
DMP-DI
DMP-DO
FAIL-CS
FASR-CS
FAIL-1
FAIL-2
FAIL-3
FAIL-4
FAIL-5
70V SENS
180V SENS
STBY
RGB1-H
RGB2-H
COL VIN1
SDRX
SDTX
SCK
ASCK
ADDTX

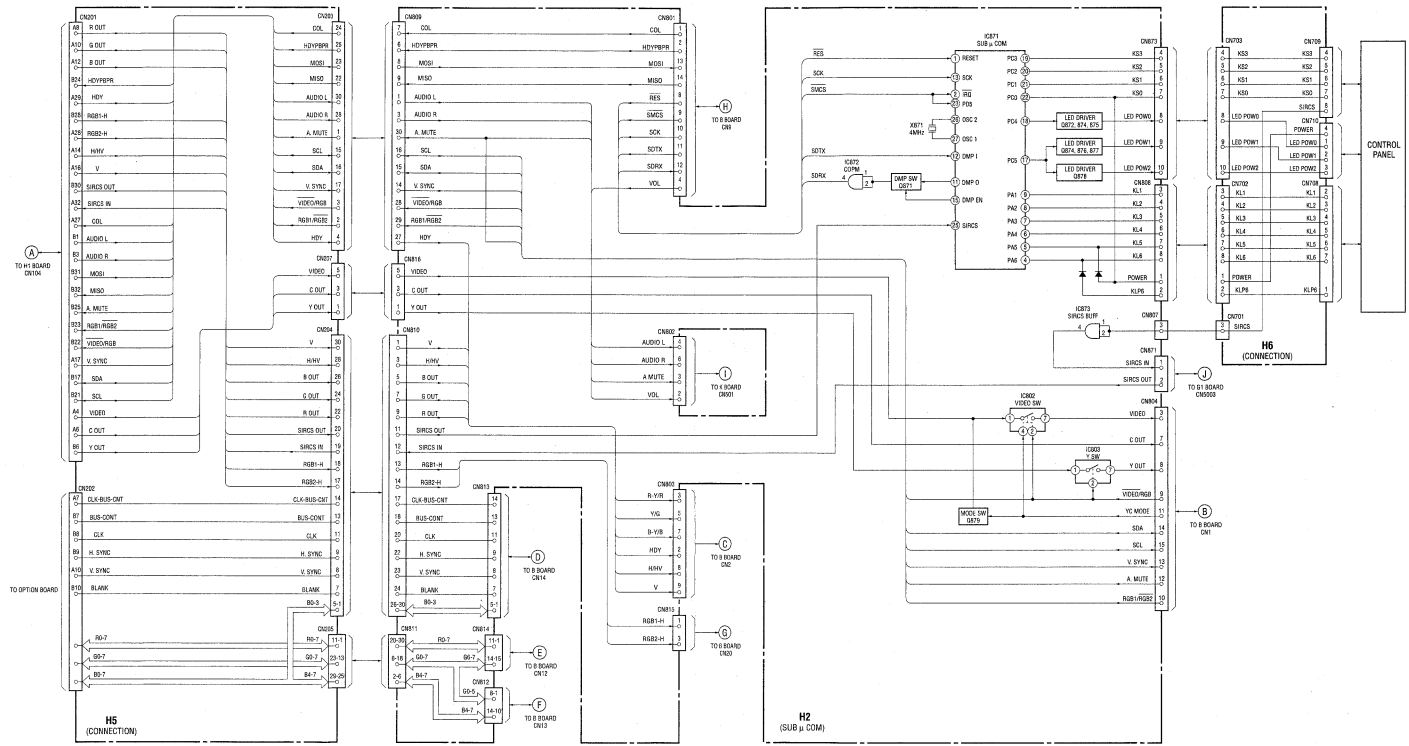
CONTROL PANEL
H5 (CONNECTION)
H2 (SUB μ COM)
H6 (CONNECTION)
IC871 SUB μ COM
IC872 COPM
IC873 SIRCS BUFF
IC902 VIDEO SW
IC903 Y SW
X871 4MHz
DMP SW Q871
MODE SW Q879
LED DRIVER Q872, 874, 875
LED DRIVER Q874, 876, 877
LED DRIVER Q878
TO OPTION BOARD
TO HT BOARD CN104
TO B BOARD CN9
TO K BOARD CN501
TO B BOARD CN14
TO B BOARD CN12
TO B BOARD CN13
TO B BOARD CN2
TO B BOARD CN50
TO B1 BOARD CN5003
TO B BOARD CN1

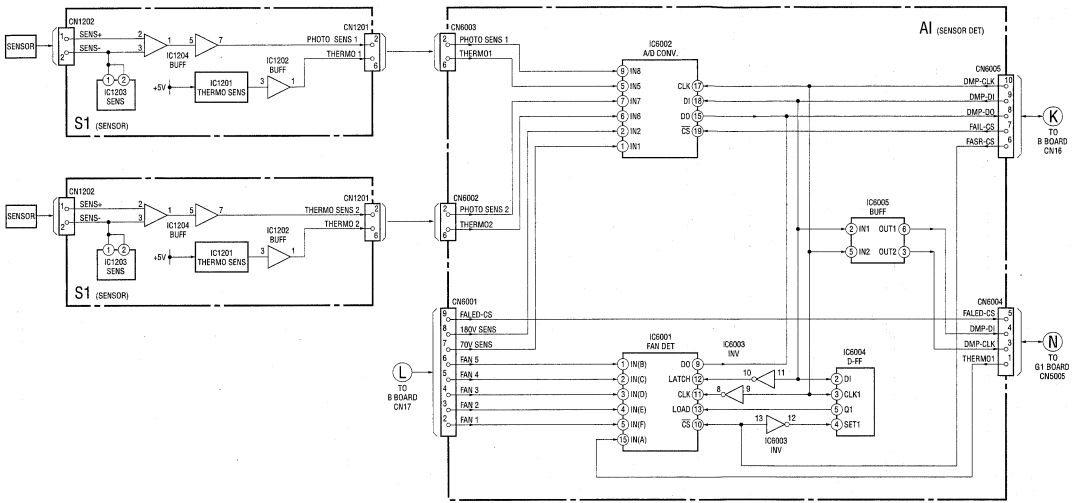
AI (SENSOR DET)
SENSOR
CN1202
SENS+
SENS-
IC1204 BUFF
IC1203 SENS
+5V
IC1201 THERMO SENS
IC1202 BUFF
CN1201
PHOTO SENS 1
THERMO 1
S1 (SENSOR)
THERMO SENS 2
THERMO 2
CN6003
CN6002
CN6001
IC6002 A/D CONV.
IC6001 FAN DET
IC6003 INV
IC6004 D-FF
IC6005 BUFF
CN6005
CN6004
DMP-CLK
DMP-DI
DMP-DO
FAIL-CS
FASR-CS
FALED-CS
180V SENS
70V SENS
FAN 5
FAN 4
FAN 3
FAN 2
FAN 1
THERMO1
THERMO2
TO B BOARD CN16
TO B BOARD CN17
TO G1 BOARD CN6005

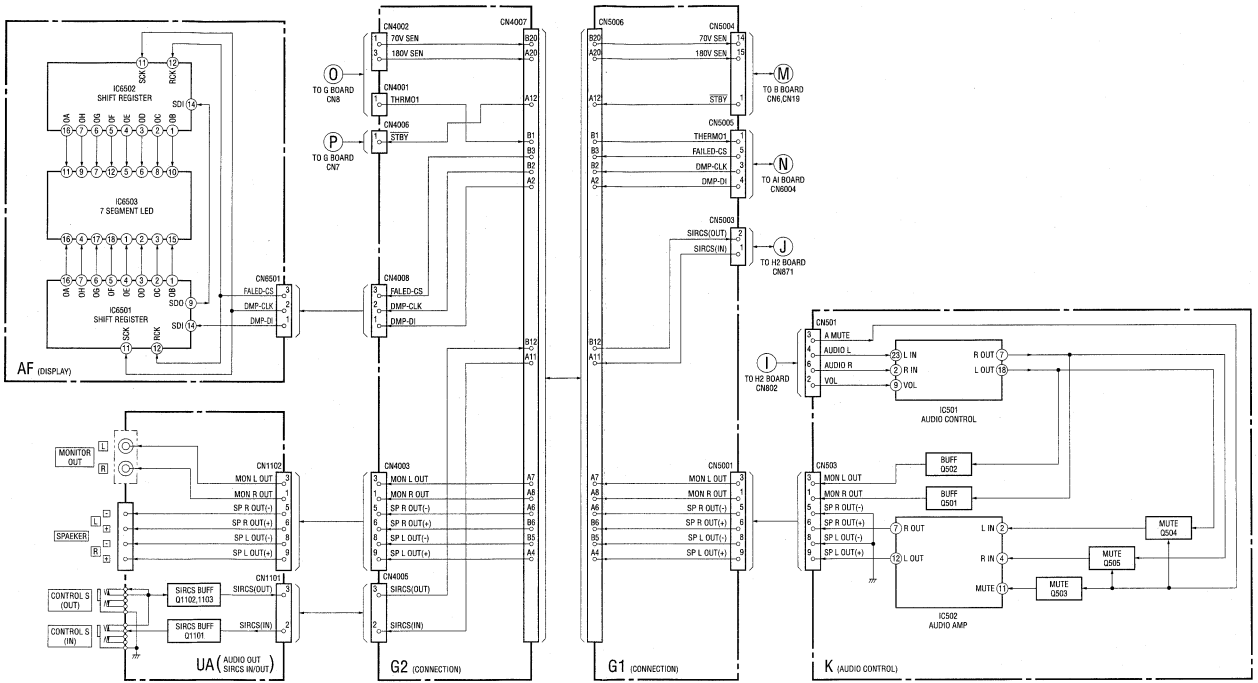
AF (DISPLAY)
IC6502 SHIFT REGISTER
IC6503 7 SEGMENT LED
IC6501 SHIFT REGISTER
CN6501
FALED-CS
DMP-CLK
DMP-DI
SDO
SDI
SCK
RCK
TO G BOARD CN8
TO G BOARD CN7
CN4002
CN4001
CN4006
CN4007
70V SEN
180V SEN
THRM01
STBY
CN4008
CN4003
CN4005
MON L OUT
MON R OUT
SP R OUT(-)
SP R OUT(+)
SP L OUT(-)
SP L OUT(+)
SIRCS(OUT)
SIRCS(IN)
G2 (CONNECTION)
CN5006
CN5004
CN5005
CN5003
TO B BOARD CN6,CN19
TO AI BOARD CN6004
TO H2 BOARD CN871
CN5001
G1 (CONNECTION)
TO H2 BOARD CN802
CN501
A MUTE
AUDIO L
AUDIO R
VOL
L IN
R IN
R OUT
L OUT
IC501 AUDIO CONTROL
CN503
BUFF Q502
BUFF Q501
MUTE Q504
MUTE Q505
MUTE Q503
IC502 AUDIO AMP
K (AUDIO CONTROL)
MONITOR OUT
SPAEKER
CONTROL S (OUT)
CONTROL S (IN)
CN1102
CN1101
SIRCS BUFF Q1102,1103
SIRCS BUFF Q1101
UA (AUDIO OUT SIRCS IN/OUT)

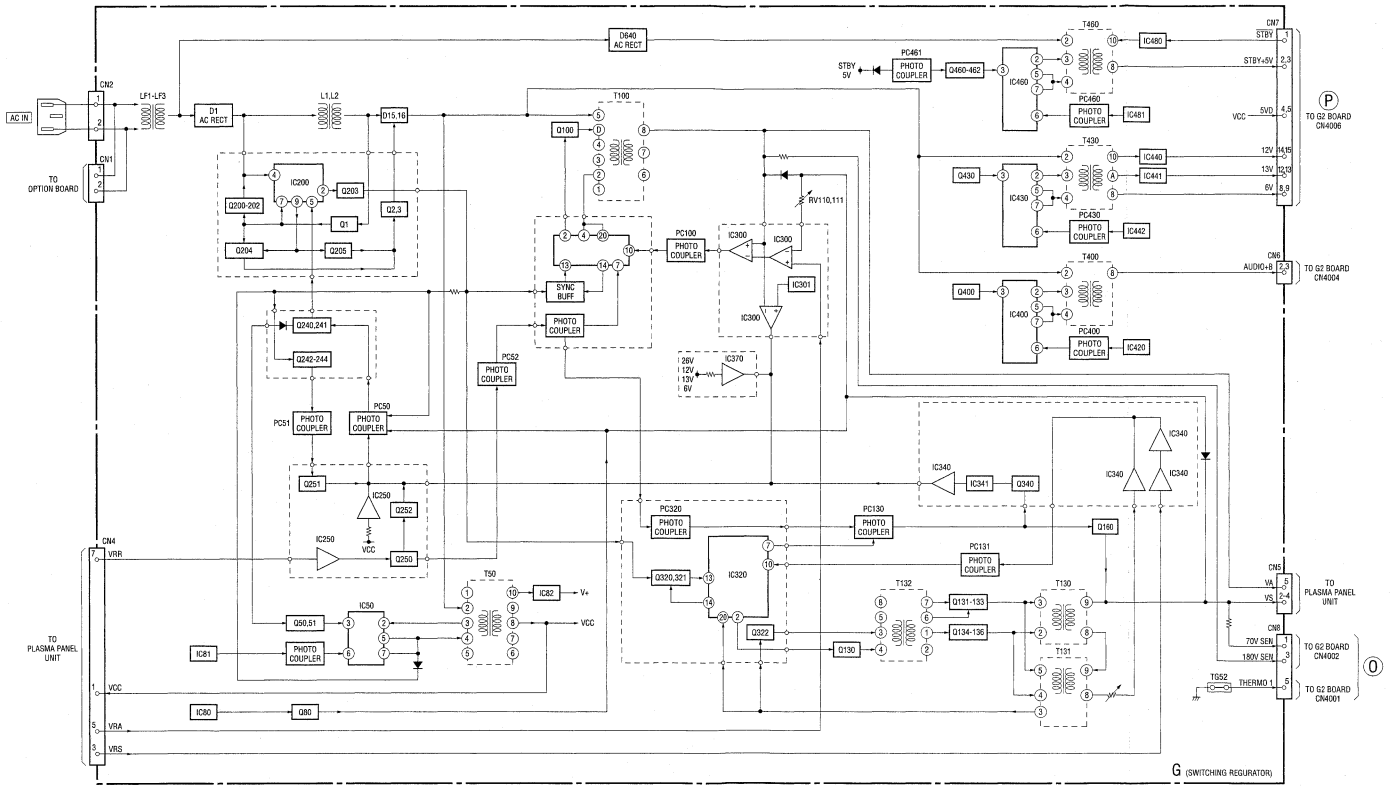
AC IN
CN2
CN1
TO OPTION BOARD
LF1-LF3
D1 AC RECT
L1,L2
D15,16
D640 AC RECT
T100
Q100
IC200
Q203
Q200-202
Q1
Q2,3
Q204
Q205
SYNC BUFF
PHOTO COUPLER
PC100
IC300
IC301
RV110,111
PC52
IC370
26V
12V
13V
6V
Q240,241
Q242-244
PC50
PC51
Q251
IC250
Q252
Q250
VCC
PC320
Q320,321
IC320
PC130
PC131
Q166
IC340
IC341
Q340
T132
Q131-133
Q134-136
T130
T131
Q130
Q322
T50
IC82
V+
VCC
IC50
Q50,51
IC81
IC80
Q80
CN4
VRR
VCC
VRA
VRS
TO PLASMA PANEL UNIT
STBY 5V
PC461
Q460-462
IC460
T460
IC480
PC460
IC481
T430
Q430
IC430
IC440
IC441
PC430
IC442
T400
Q400
IC400
IC420
PC400
CN7
STBY
STBY+5V
5VD
VCC
12V
13V
6V
TO G2 BOARD CN4006
CN6
AUDIO+B
TO G2 BOARD CN4004
CN5
VA
VS
TO PLASMA PANEL UNIT
CN8
70V SEN
180V SEN
TO G2 BOARD CN4002
TG52
THERMO 1
TO G2 BOARD CN4001
G (SWITCHING REGURATOR)

SECTION 9
DIAGRAMS

9-1. FRAME SCHEMATIC DIAGRAM

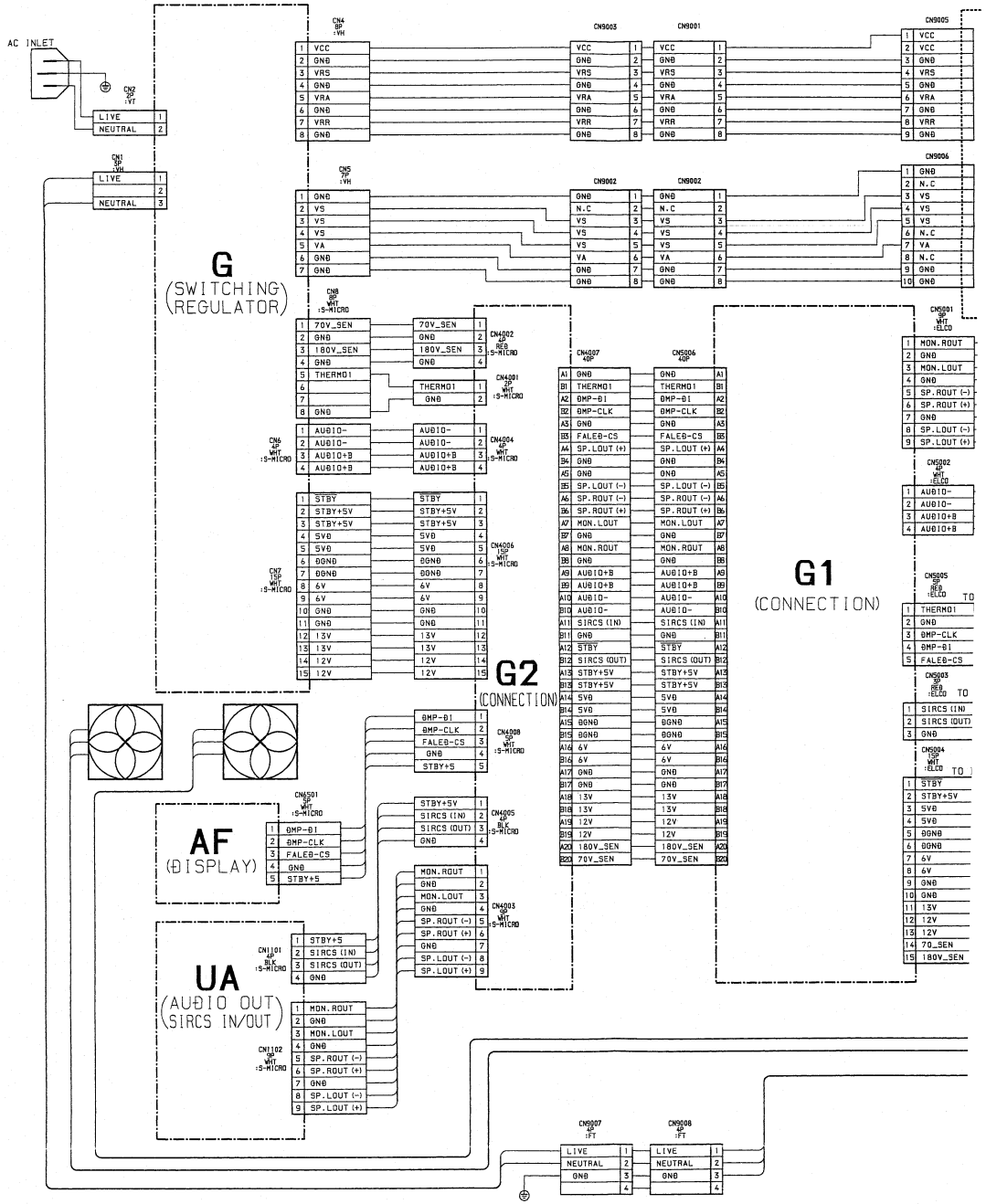

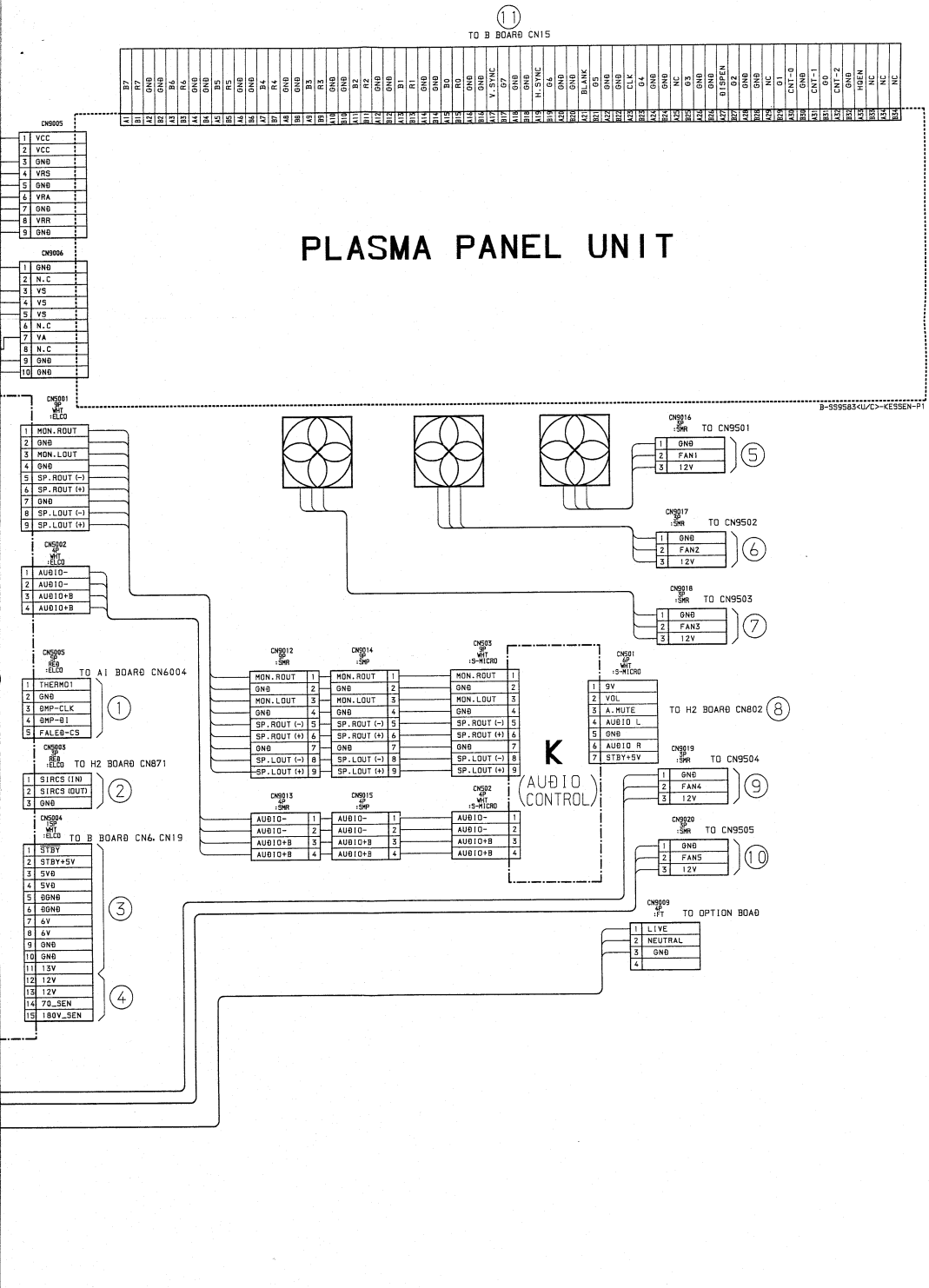
11
TO B BOARD CN15
B7 R7 GND GND B6 R6 GND B5 R5 GND GND B4 R4 GND GND B3 R3 GND GND B2 R2 GND GND B1 R1 GND GND B0 R0 GND GND V-SYNC G7 GND GND H-SYNC G6 GND GND BLANK G5 GND GND CLK G4 GND GND NC G3 GND GND DISPEN G2 GND GND NC G1 CNT-0 GND CNT-1 G0 CNT-2 GND HQEN NC NC NC
CN9005
1 VCC
2 VCC
3 GND
4 VRS
5 GND
6 VRA
7 GND
8 VRR
9 GND
CN9006
1 GND
2 N.C
3 VS
4 VS
5 VS
6 N.C
7 VA
8 N.C
9 GND
10 GND
PLASMA PANEL UNIT
B-599583<U/C>-KESSEN-P1
CN9001
1 MON.ROUT
2 GND
3 MON.LOUT
4 GND
5 SP.ROUT (-)
6 SP.ROUT (+)
7 GND
8 SP.LOUT (-)
9 SP.LOUT (+)
CN9002
1 AUDIO-
2 AUDIO-
3 AUDIO+B
4 AUDIO+B
CN9005
1 THERMO1
2 GND
3 OMP-CLK
4 OMP-DI
5 FALEG-CS
TO A1 BOARD CN6004
1
CN9003
1 SIRCS (IN)
2 SIRCS (OUT)
3 GND
TO H2 BOARD CN871
2
CN9004
1 STBY
2 STBY+5V
3 5VB
4 5VB
5 BGNB
6 BGNB
7 6V
8 6V
9 GND
10 GND
11 13V
12 12V
13 12V
14 70_SEN
15 180V_SEN
TO B BOARD CN6, CN19
3
4
CN9012
1 MON.ROUT
2 GND
3 MON.LOUT
4 GND
5 SP.ROUT (-)
6 SP.ROUT (+)
7 GND
8 SP.LOUT (-)
9 SP.LOUT (+)
CN9014
1 MON.ROUT
2 GND
3 MON.LOUT
4 GND
5 SP.ROUT (-)
6 SP.ROUT (+)
7 GND
8 SP.LOUT (-)
9 SP.LOUT (+)
CN9013
1 AUDIO-
2 AUDIO-
3 AUDIO+B
4 AUDIO+B
CN9015
1 AUDIO-
2 AUDIO-
3 AUDIO+B
4 AUDIO+B
CN903
1 MON.ROUT
2 GND
3 MON.LOUT
4 GND
5 SP.ROUT (-)
6 SP.ROUT (+)
7 GND
8 SP.LOUT (-)
9 SP.LOUT (+)
CN902
1 AUDIO-
2 AUDIO-
3 AUDIO+B
4 AUDIO+B
K
AUDIO CONTROL
CN901
1 9V
2 VOL
3 A.MUTE
4 AUDIO_L
5 GNB
6 AUDIO_R
7 STBY+5V
TO H2 BOARD CN802
8
CN9016
1 GNB
2 FAN1
3 12V
TO CN9501
5
CN9017
1 GNB
2 FAN2
3 12V
TO CN9502
6
CN9018
1 GNB
2 FAN3
3 12V
TO CN9503
7
CN9019
1 GNB
2 FAN4
3 12V
TO CN9504
9
CN9020
1 GNB
2 FAN5
3 12V
TO CN9505
10
CN9009
1 LIVE
2 NEUTRAL
3 GNB
4
TO OPTION BOAD

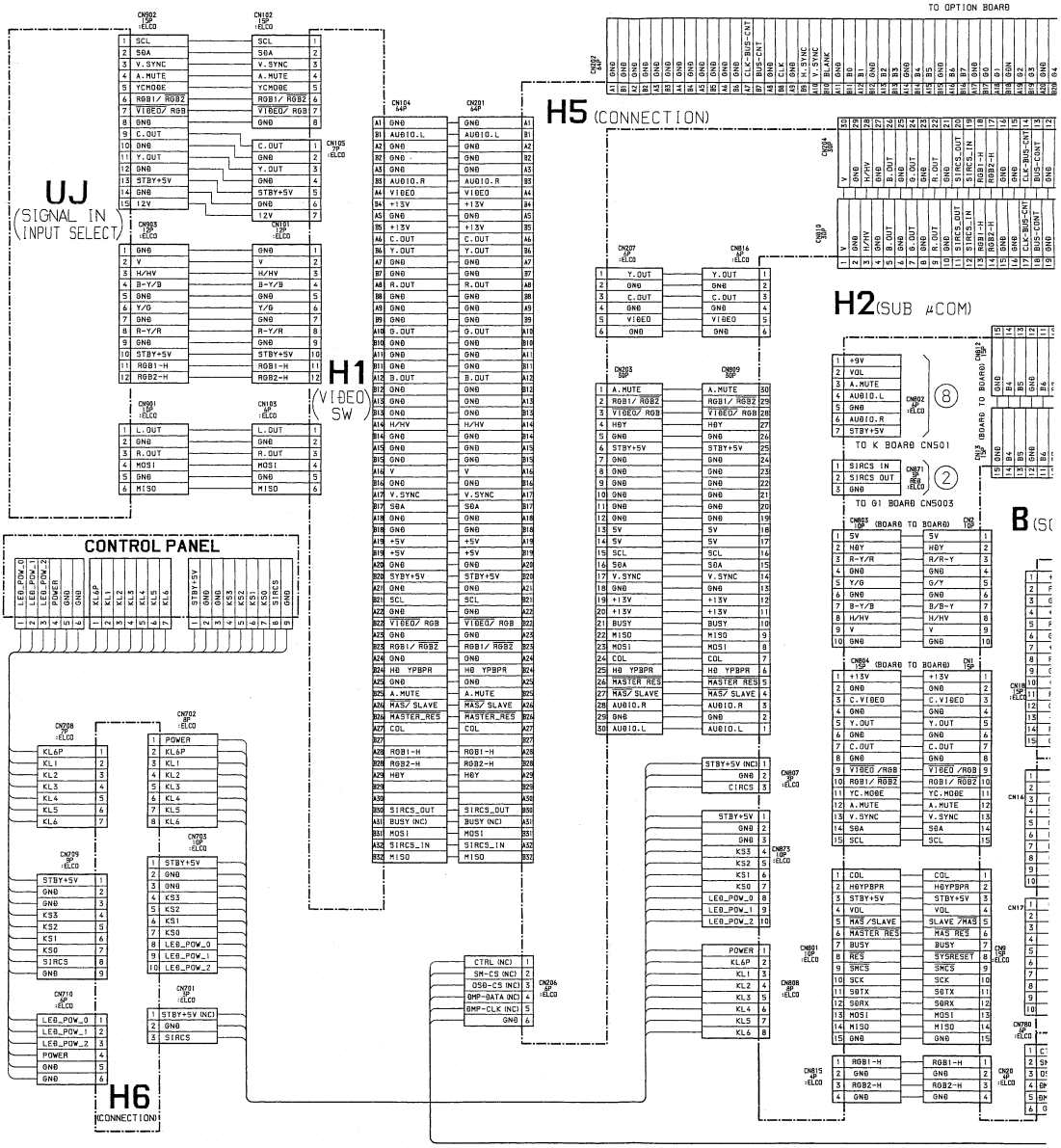
UJ
(SIGNAL IN
INPUT SELECT)
H1
(VIDEO
SW)
H5 (CONNECTION)
H2(SUB μCOM)
H6
(CONNECTION)
CONTROL PANEL
TO OPTION BOARD
TO K BOARD CN501
TO G1 BOARD CN5003
(BOARD TO BOARD)
B (SC

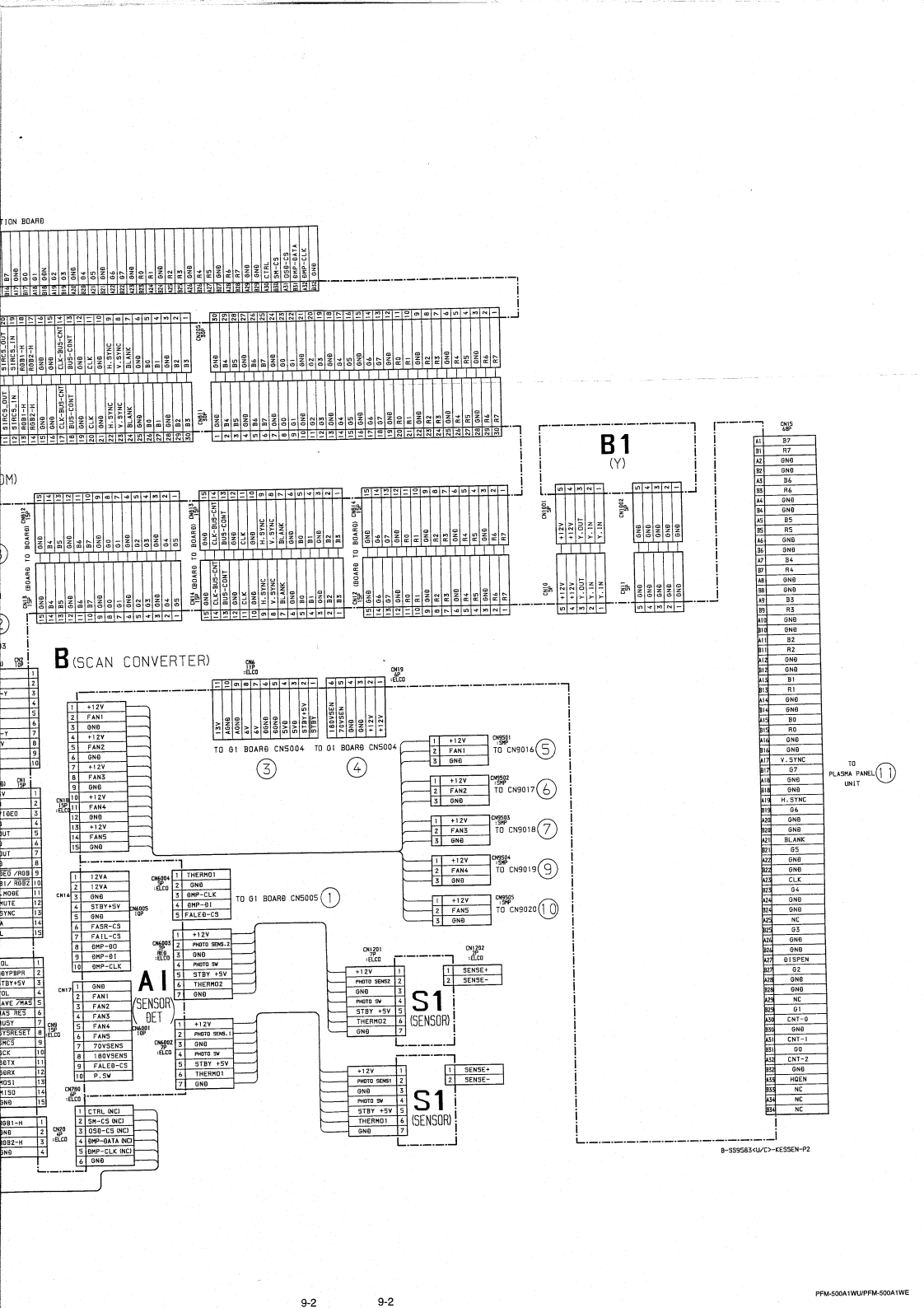
B (SCAN CONVERTER)
B1 (Y)
A1 (SENSOR SET)
S1 (SENSOR)
S1 (SENSOR)
TO G1 BOARD CN5004
TO G1 BOARD CN5004
TO G1 BOARD CN5005
TO CN9016
TO CN9017
TO CN9018
TO CN9019
TO CN9020
TO PLASMA PANEL UNIT
B-S59583<U/C>-KESSEN-P2

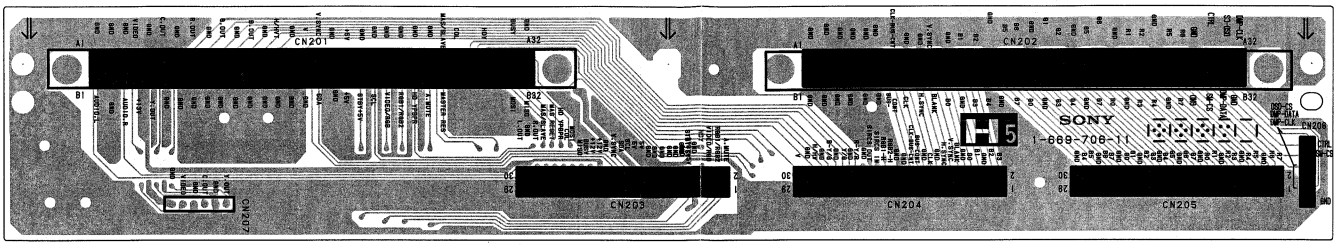

H5 – B SIDE –
SUFFIX: -11

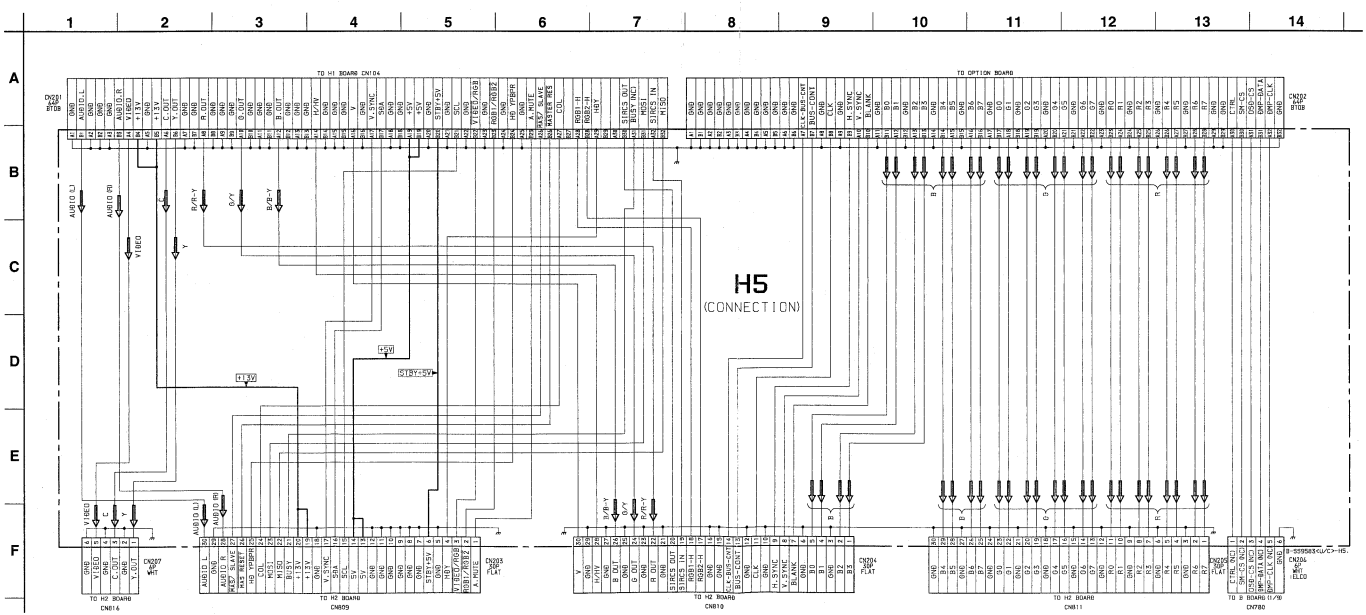

9-2. SCHEMATIC DIAGRAMS AND PRINTED WIRING BOARDS

Note:

- All capacitors are in μF unless otherwise noted. pF: μμF 50WV or less are not indicated except for electrolytics.
- All electrolytics are in 50V unless otherwise specified.
- All resistors are in ohms, 1/4W in resistance, 1/10W in chip resistance.
  kΩ = 1000Ω, MΩ = 1000kΩ
- : nonflammable resistor.
- : fusible resistor.
- △ : internal component.
- : panel designation and adjustment for repair.
- All variable and adjustable resistors have characteristic curve B, unless otherwise noted.
- Voltage value is the reference value between it and the earth, when NTSC color bar signal is received from color bar generator (digital multi-meter used : 10M ohms/V DC).
- Unit of voltage values is V (volt).
- * : Measurement disabled.
- Circled numbers are waveform references.
- ⇨ : Signal Path.

Reference information

RESISTOR	: RN	METAL FILM
	: RC	SOLID
	: FPRD	NONFRAMMABLE CARBON
	: FUSE	NONFLAMMABLE FUSIBLE
	: RS	NONFLAMMABLE METAL OXIDE
	: RB	NONFLAMMABLE CEMENT
	: RW	NONFLAMMABLE WIREWOUND
	:	ADJUSTMENT RESISTOR
COIL	: LF-8L ※	MICRO INDUCTOR
CAPACITOR	: TA	TANTALUM
	: PS	STYROL
	: PP	POLYPROPYLENE
	: PT	MYLAR
	: MPS	METALIZED POLYESTER
	: MPP	METALIZED POLYPROPYLENE
	: ALB	BIPOLAR
	: ALT	HIGH TEMPERATURE
	: ALR	HIGH RIPPLE

Note: The component identified by mark ⚠ are critical for safety. Replace only with part number specified.

Note: Les composants identifies par une marque ⚠ sont critiques pour la securite. Ne les remplacer que par une piece portant le numero specifie.

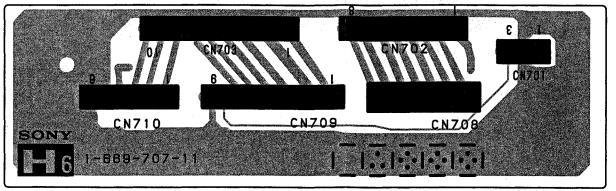

H6 – B SIDE –
SUFFIX: -11

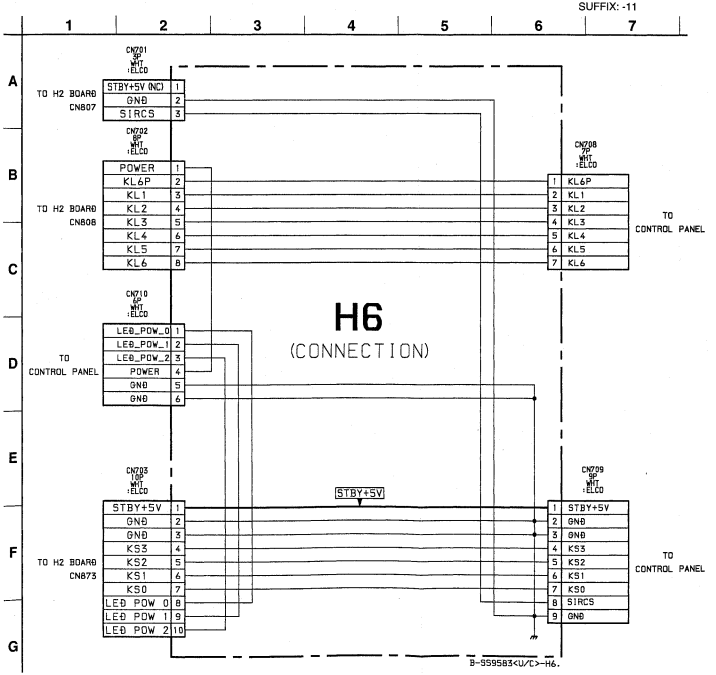

UJ BOARD

D901	I-2
D902	J-1
D903	I-1
D904	J-2
D905	K-2
D921	A-1
D922	B-1
D923	B-1
D926	H-2
D927	F-2
D928	F-1
D929	F-1
D930	F-2
D933	G-1
D934	G-1
D940	D-1
D941	D-2
D942	D-1
D943	D-2
D944	C-1
D945	C-2
D946	C-1
D947	C-2
D951	L-2
D952	L-1
IC903	H-1
IC904	H-1
IC905	E-1
IC906	D-1
Q901	E-1
Q902	E-1
Q903	E-1
Q904	H-2
Q905	H-1
Q906	I-1

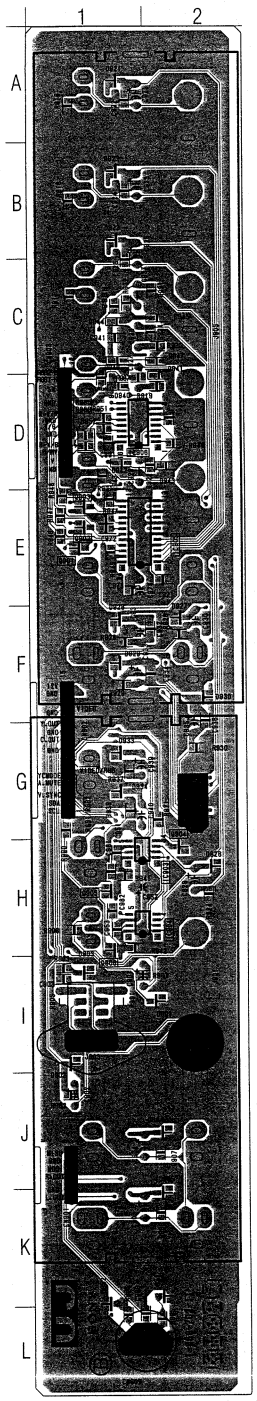

UJ – B SIDE –
SUFFIX: -11

UJ BOARD IC903, IC904 MM1113XFBE

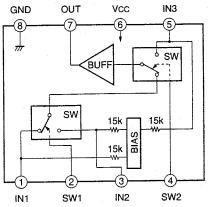

UJ BOARD IC905

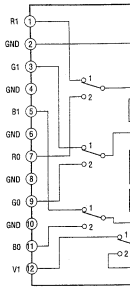

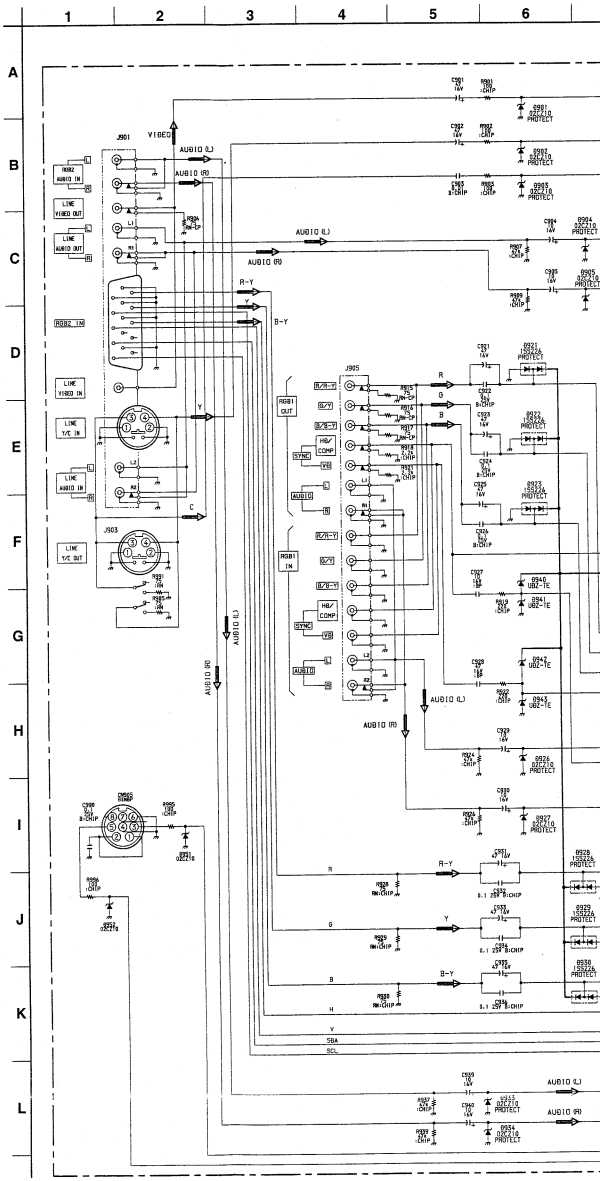

BOARD IC905 BA7657F

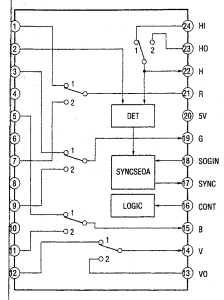

UJ BOARD IC906 MC74HC4052F

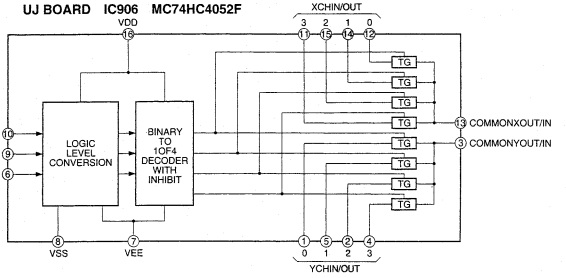

6 7 8 9 10 11 12 13 14 15

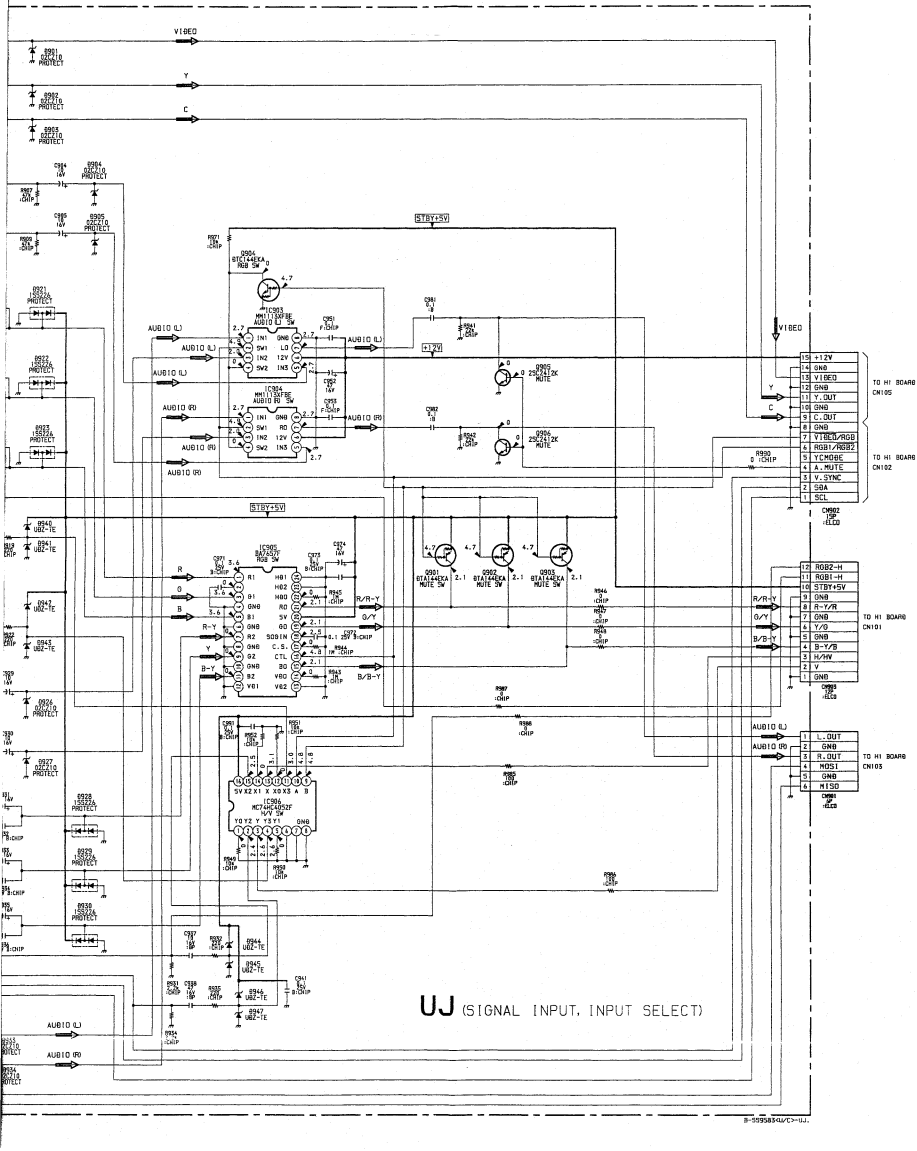

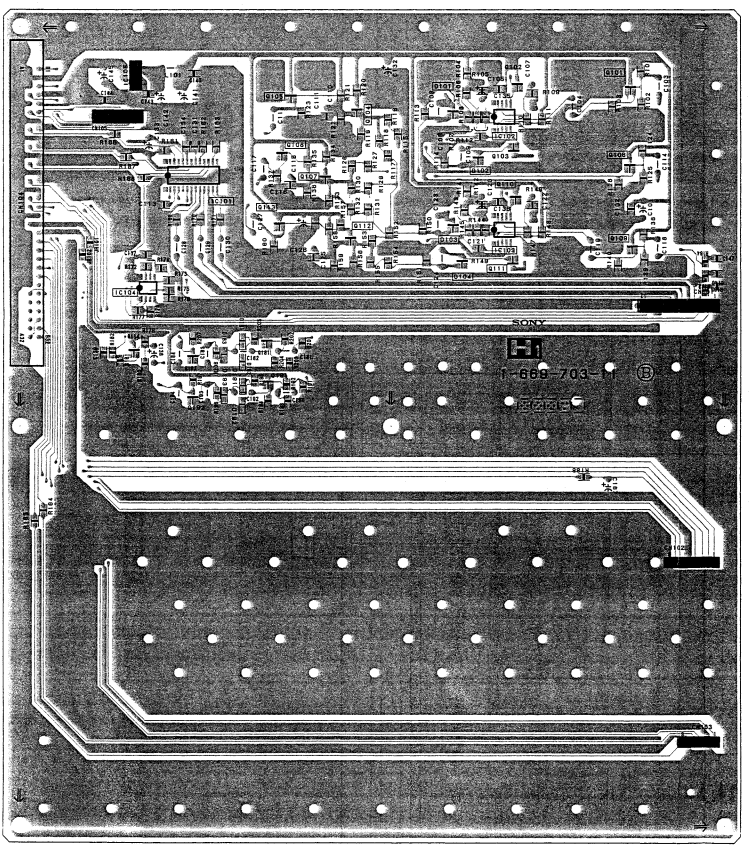

H1 – B SIDE –
SUFFIX: -11

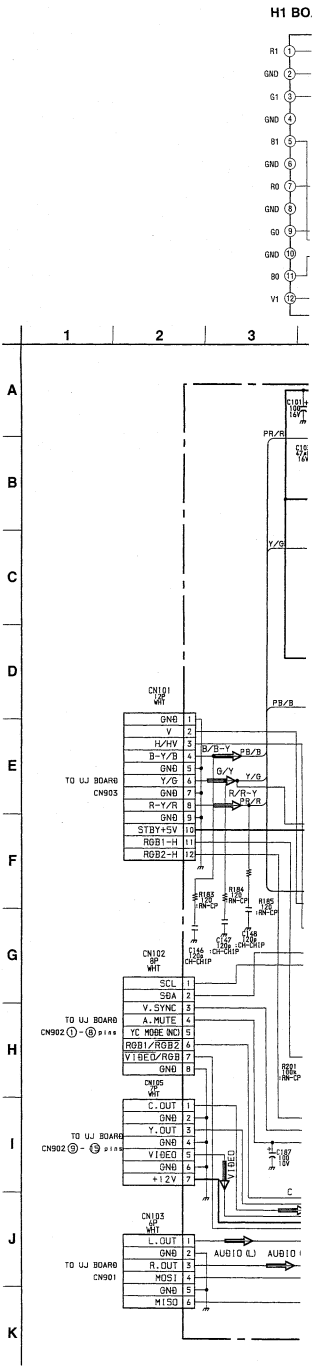

H1 BOARD IC101 BA7657F

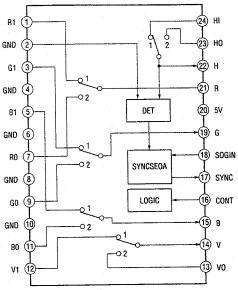

H1 BOARD IC104 BA10358F

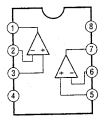

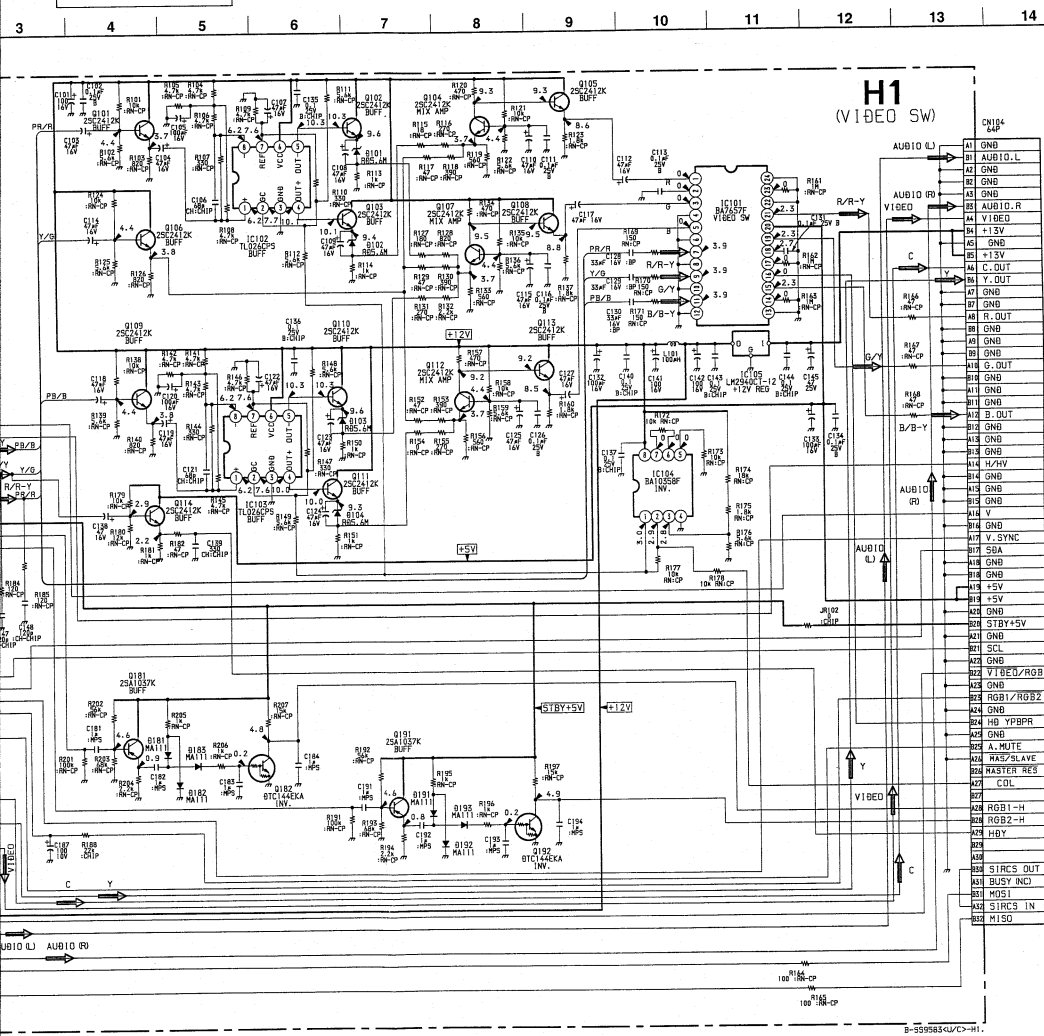

9-6

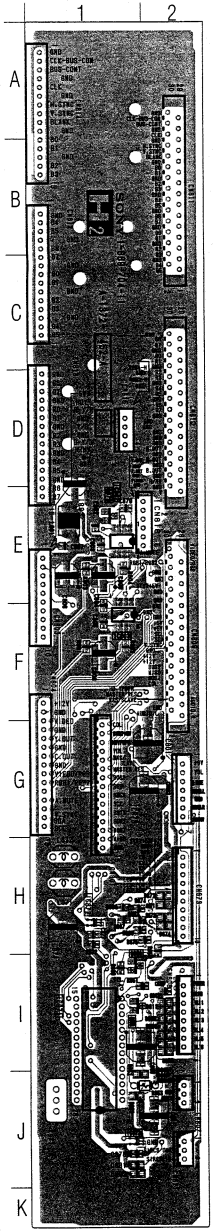

H2 – A SIDE –
SUFFIX: -11

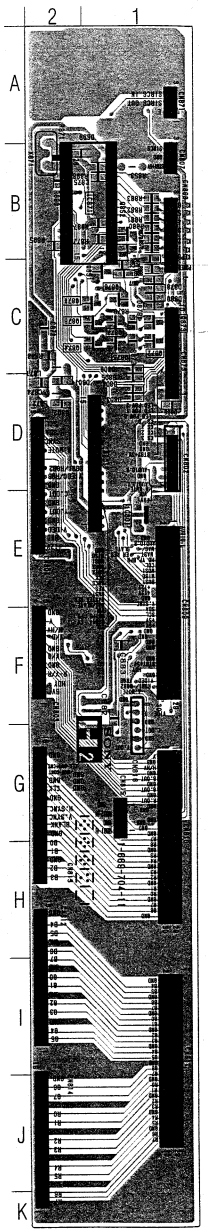

H2 – B SIDE –
SUFFIX: -11

H2 BOARD
*: B SIDE

D801	*M-1
D802	*M-1
D803	*M-1
D804	*M-1
D805	*M-1
D806	*M-1
D807	J-2
D808	I-2
D809	I-2
D810	I-2
D811	I-2
D812	I-2
D850	*I-1
D851	I-1
D852	J-1
D853	J-1
D871	H-2
D872	H-2
D873	H-2
D874	H-2
D875	J-2
D876	*I-2
D877	*I-2
D878	*I-2
D879	*I-2
D880	*I-2
D881	K-1
D882	K-1
D898	*M-2
D899	*J-1
IC801	*G-2
IC802	B-1
IC803	F-1
IC871	*I-1
IC872	H-1
IC873	J-1
Q850	I-1
Q851	*I-1
Q852	*I-1
Q853	I-1
Q871	*I-1
Q872	*I-2
Q873	*I-2
Q874	*I-1
Q875	*I-1
Q876	*I-1
Q877	*I-1
Q878	*I-1
Q879	E-1

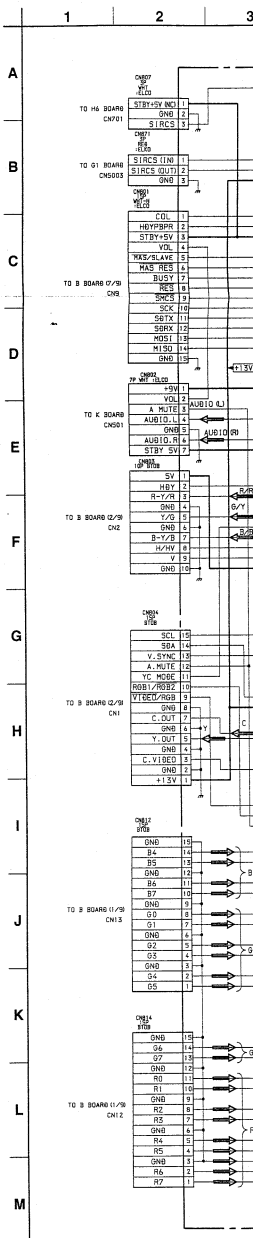

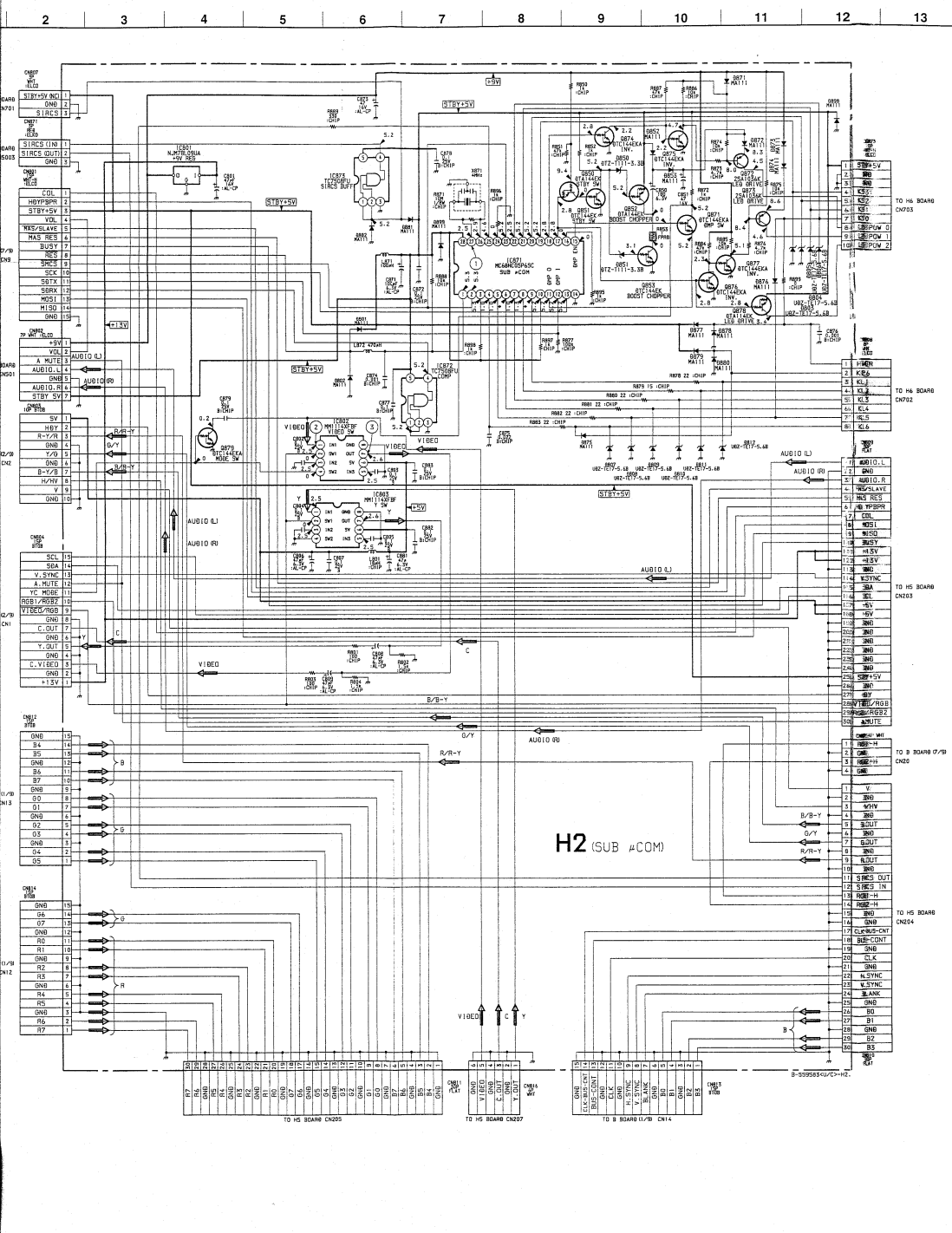
H2 (SUB μCOM)
TO H5 BOARD CN205
TO H5 BOARD CN207
TO B BOARD (1/5) CN14
TO H6 BOARD CN703
TO H6 BOARD CN702
TO H5 BOARD CN203
TO H5 BOARD CN204
TO B BOARD (7/5) CN20
B-5595854<U/C>-H2.

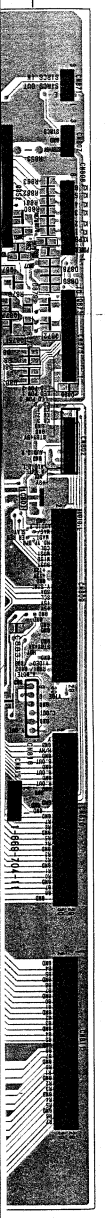

H2 – B SIDE –
SUFFIX: -11

9-7

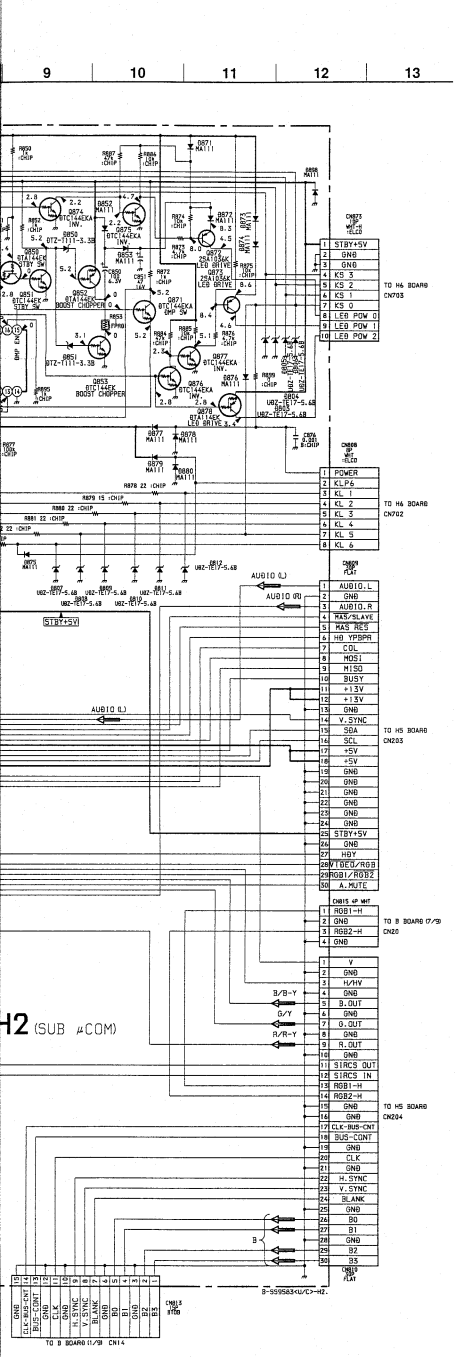

H2 BOARD

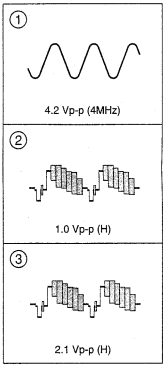

H2 BOARD IC802, 803 MM1114XFBF

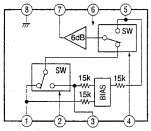

9-7

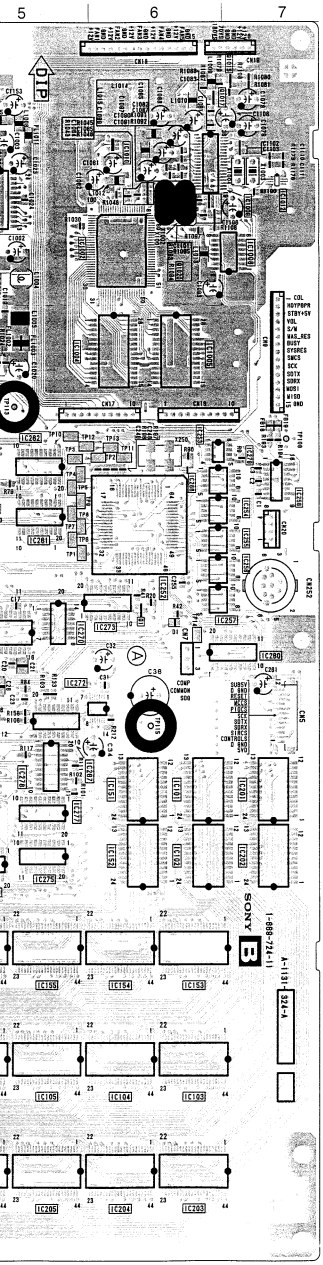
5
6
7
DIP
SONY
B
A-1131-324-A
I-888-724-I
IC262
IC261
IC257
IC280
IC272
IC273
IC275
IC155
IC154
IC153
IC105
IC104
IC103
IC205
IC204
IC203
CN17
CN16
CN15
CN14
CN13
CN12
CN11
CN10
CN9
CN8
CN7
CN6
CN5
CN4
CN3
CN2
CN1
CN252
CN253
CN254
CN255
CN256
CN257
CN258
CN259
CN260
CN261
CN262
CN263
CN264
CN265
CN266
CN267
CN268
CN269
CN270
CN271
CN272
CN273
CN274
CN275
CN276
CN277
CN278
CN279
CN280
CN281
CN282
CN283
CN284
CN285
CN286
CN287
CN288
CN289
CN290
CN291

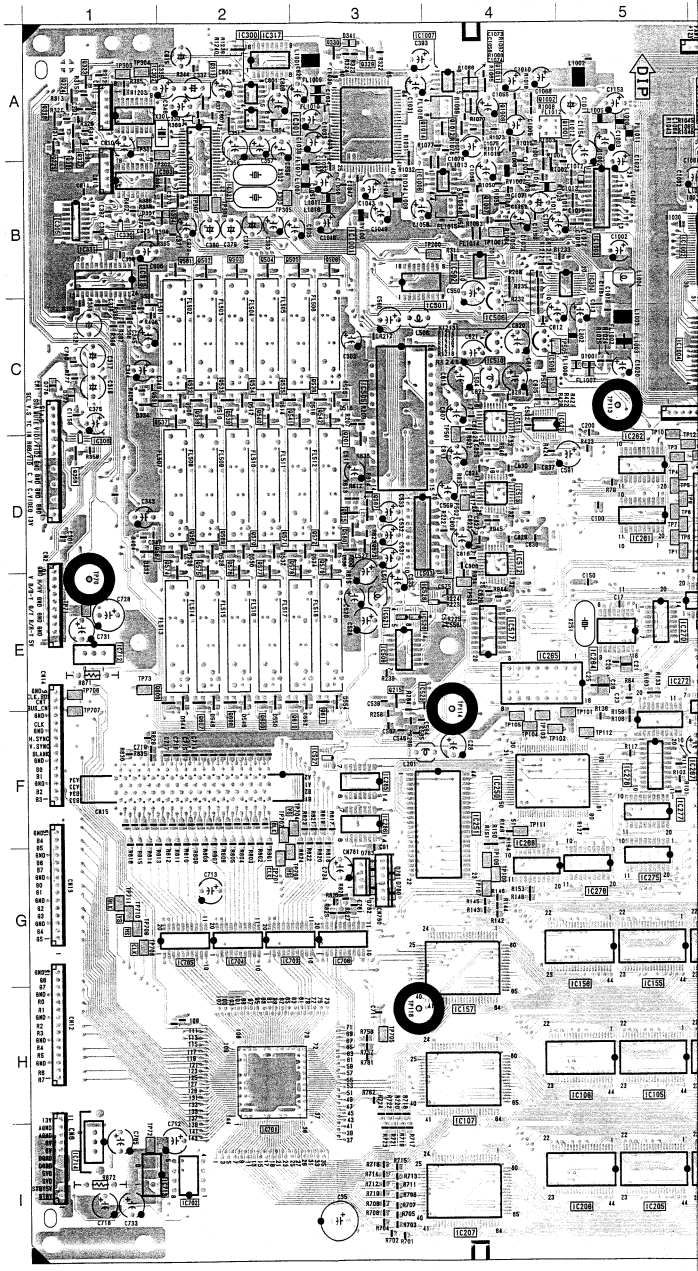

9-8

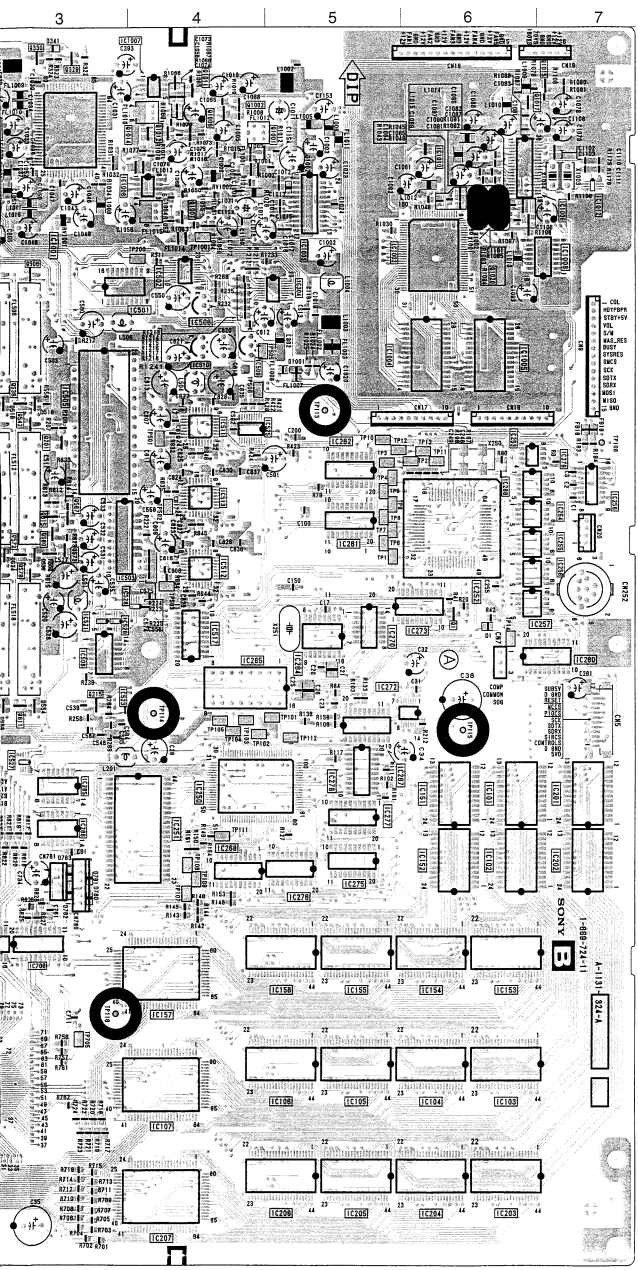

B – A SIDE –
SUFFIX: -11

B BOARD

*: B SIDE

D1	E-6	IC505	*C-3	Q559	*D-3
D16	*F-7	IC508	*C-4	Q560	*D-3
D17	*F-7	IC509	*C-5	Q561	*D-2
D18	*F-7	IC510	*C-4	Q562	*D-2
D19	*F-7	IC511	D-4	Q563	*D-2
D20	*F-7	IC512	E-4	Q564	*D-2
D21	*F-7	IC513	D-4	Q565	*D-3
D22	*F-7	IC514	*D-4	Q566	*D-3
D23	*F-7	IC515	*E-4	Q567	E-2
D203	*E-4	IC516	*D-4	Q568	E-2
D204	*E-4	IC517	E-4	Q569	E-2
D322	*C-1	IC521	E-3	Q570	E-2
D324	*B-1	IC522	*F-3	Q571	E-2
D326	*C-1	IC523	F-4	Q572	E-3
D331	B-1	IC525	D-5	Q573	E-3
D332	E-1	IC526	E-4	Q574	E-2
D334	C-1	IC527	F-3	Q575	E-2
D336	C-1	IC528	E-4	Q576	E-2
D341	A-3	IC701	I-2	Q577	E-2
D501	*B-2	IC702	*I-2	Q578	E-3
D502	*B-2	IC703	G-2	Q579	E-3
D503	*B-2	IC704	G-2	Q580	E-3
D504	*B-2	IC705	G-2	Q581	*E-2
D505	*B-3	IC706	G-3	Q582	*E-2
D508	C-2	IC707	*H-1	Q583	*E-2
D510	C-2	IC708	*H-3	Q584	*E-2
D512	C-2	IC712	*E-1	Q585	*E-3
D514	C-2	IC713	*I-1	Q586	*E-3
D516	C-3	IC714	*I-1	Q587	D-3
D518	C-3	IC777	*C-1	Q588	*F-2
D520	C-2	IC1001	A-3	Q589	*F-2
D521	*C-2	IC1002	B-6	Q590	*F-2
D522	*C-2	IC1003	B-5	Q591	*F-2
D523	*C-3	IC1004	C-6	Q592	*F-3
D524	*C-3	IC1005	C-6	Q593	*F-3
D526	E-2	IC1006	B-4	Q594	*E-2
D528	E-2	IC1007	A-4	Q595	*E-2
D530	E-2	IC1008	B-7	Q596	*E-2
D532	E-2	IC1009	B-7	Q597	*E-2
D534	E-3	IC1010	A-6	Q598	*E-3
D536	E-3	IC1011	*B-5	Q599	*E-3
D537	*E-2	IC1012	B-7	Q600	*E-2
D538	*E-2			Q601	*E-2
D539	*E-2	Q1	E-6	Q602	*E-2
D540	E-3	Q201	D-3	Q603	*E-2
D541	*E-3	Q215	F-3	Q604	*E-3
D542	*E-3	Q307	*A-1	Q605	*E-3
D544	F-2	Q310	*A-2	Q606	F-2
D546	F-2	Q311	A-2	Q607	F-2
D548	F-2	Q313	*B-2	Q608	F-2
D550	F-2	Q314	*B-2	Q609	F-2
D777	C-1	Q315	*D-1	Q610	F-3
D778	C-1	Q316	*C-1	Q611	F-3
D1001	C-5	Q317	*C-1	Q612	*C-3
D1002	B-5	Q318	*B-2	Q613	*C-4
		Q320	*E-1	Q614	*D-3
IC100	*D-5	Q321	*C-1	Q615	D-3
IC101	F-7	Q322	*B-1	Q701	*F-3
IC102	G-7	Q323	A-1	Q702	*F-3
IC103	I-6	Q324	A-1	Q1001	A-4
IC104	I-6	Q325	A-1	Q1002	A-4
IC105	I-5	Q326	A-1	Q1003	*A-5
IC106	I-5	Q327	A-1	Q1004	*A-5
IC107	I-4	Q328	A-1	Q1005	*A-4
IC108	*I-4	Q329	A-3	Q1006	A-4
IC150	A-3	Q330	A-3	Q1007	B-4
IC151	F-6	Q351	*B-1	Q1008	*B-4
IC152	G-6	Q352	*A-1	Q1009	*B-4
IC153	H-6	Q354	B-2	Q1010	*B-4
IC154	H-6	Q355	*C-1	Q1011	A-4
IC155	H-5	Q356	*D-1	Q1012	A-4
IC156	H-5	Q357	*D-1	Q1013	A-4
IC157	H-4	Q358	D-1	Q1014	A-4
IC158	*H-4	Q501	B-2	Q1015	A-7
IC200	C-5	Q502	B-2	Q1016	*A-7
IC201	F-7	Q503	B-2	Q1018	*A-7
IC202	G-7	Q504	B-2	Q1019	*A-7
IC203	I-6	Q505	B-3	Q1020	B-7
IC204	I-6	Q506	B-3		
IC205	I-5	Q507	*C-2	TP7	D-6
IC206	I-5	Q508	*C-2	TP8	D-6
IC207	I-4	Q509	*C-2	TP10	D-6
IC208	*I-4	Q510	*C-2	TP11	D-6
IC250	F-4	Q511	*C-3	TP12	D-6
IC251	G-4	Q512	*C-2	TP13	D-6
IC252	D-6	Q513	*C-2	TP14	E-7
IC253	D-7	Q514	*C-2	TP70	E-1
IC254	D-7	Q515	*C-2	TP71	E-1
IC255	D-7	Q516	*C-2	TP72	I-1
IC256	D-7	Q517	*C-3	TP73	I-1
IC258	D-7	Q518	*C-3	TP101	F-5
IC259	*D-7	Q519	*C-2	TP102	F-5
IC260	E-7	Q520	*C-2	TP103	F-5
IC261	D-5	Q521	*C-2	TP104	F-4
IC262	D-5	Q522	*C-2	TP105	F-4
IC263	*E-7	Q523	*C-3	TP106	F-4
IC264	E-5	Q524	*C-3	TP107	G-4
IC265	*E-5	Q525	*C-2	TP108	D-7
IC266	*F-5	Q526	*C-2	TP109	G-4
IC267	F-5	Q527	*C-2	TP111	G-4
IC268	G-4	Q528	*C-2	TP112	F-5
IC269	*E-6	Q529	*C-3	TP113	C-5
IC270	E-5	Q530	*C-3	TP114	F-4
IC271	*E-5	Q531	C-2	TP115	F-6
IC273	G-6	Q532	C-2	TP116	H-4
IC275	G-5	Q533	C-2	TP200	B-4
IC276	G-5	Q534	C-2	TP301	A-1
IC277	G-5	Q535	C-3	TP302	B-2
IC278	F-5	Q536	C-3	TP303	A-1
IC280	*G-5	Q537	D-2	TP304	A-1
IC285	G-3	Q539	D-2	TP305	B-3
IC286	G-3	Q540	D-2	TP306	B-2
IC287	*G-3	Q541	D-3	TP307	B-2
IC288	D-7	Q542	D-3	TP501	B-4
IC300	A-2	Q543	*D-2	TP502	D-4
IC301	A-2	Q544	*D-2	TP503	E-4
IC302	A-1	Q545	*D-2	TP505	B-5
IC303	B-1	Q546	*D-2	TP506	C-5
IC304	C-5	Q547	*D-3	TP701	G-2
IC305	B-1	Q548	*D-3	TP702	G-2
IC306	D-1	Q549	*E-2	TP703	G-3
IC317	A-2	Q550	*E-2	TP704	G-3
IC318	*B-2	Q551	*E-3	TP705	H-3
IC319	B-1	Q552	*E-2	TP706	F-1
IC321	B-2	Q553	*E-3	TP707	F-1
IC330	B-1	Q554	*E-3	TP708	H-1
IC331	B-1	Q555	*D-2	TP709	G-1
IC501	C-4	Q556	*D-2	TP710	G-1
IC502	B-4	Q557	*D-2	TP711	G-1
IC503	*D-4	Q558	*D-2	TP1001	B-4

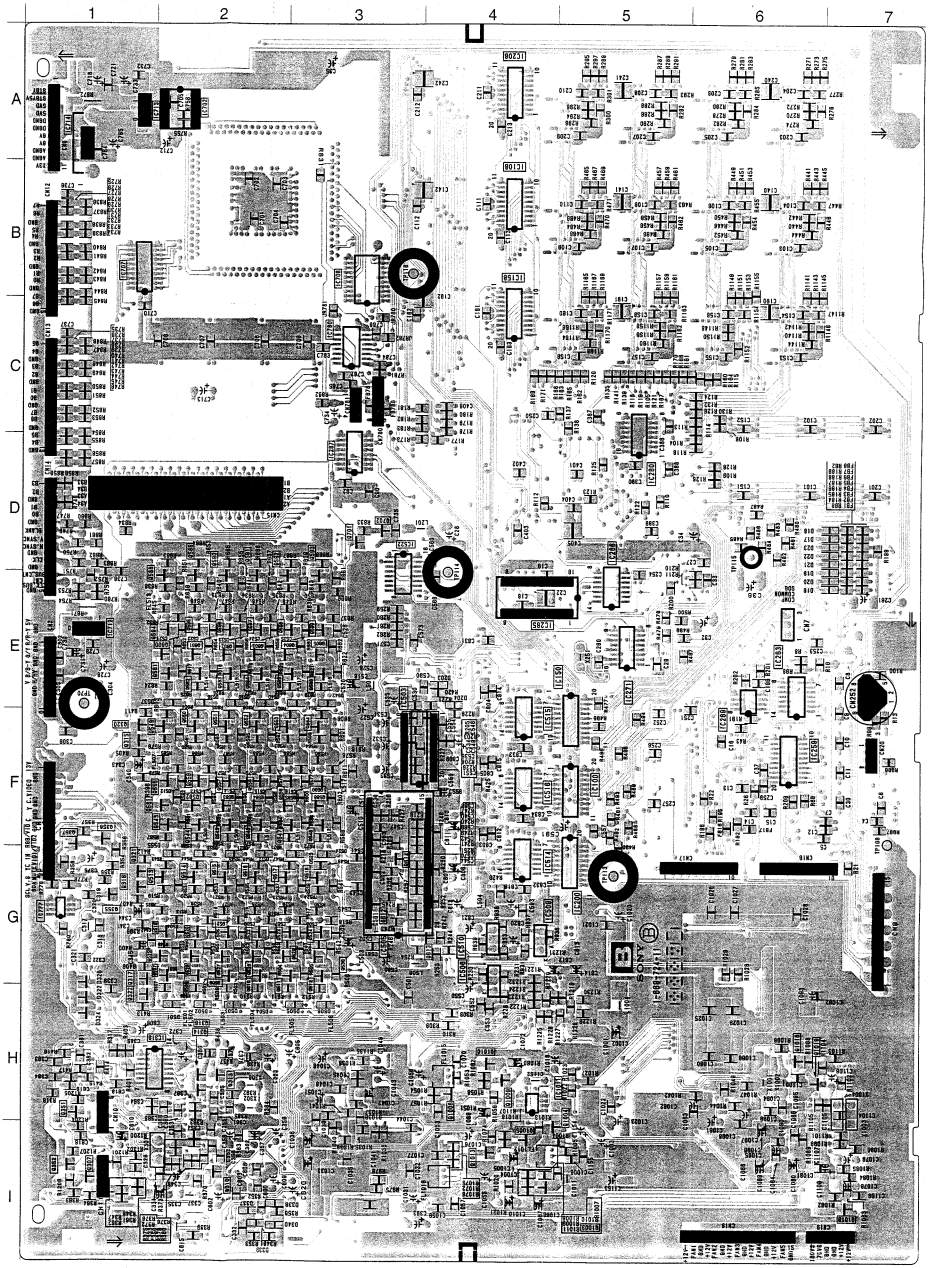

B – B SIDE –
SUFFIX: -11

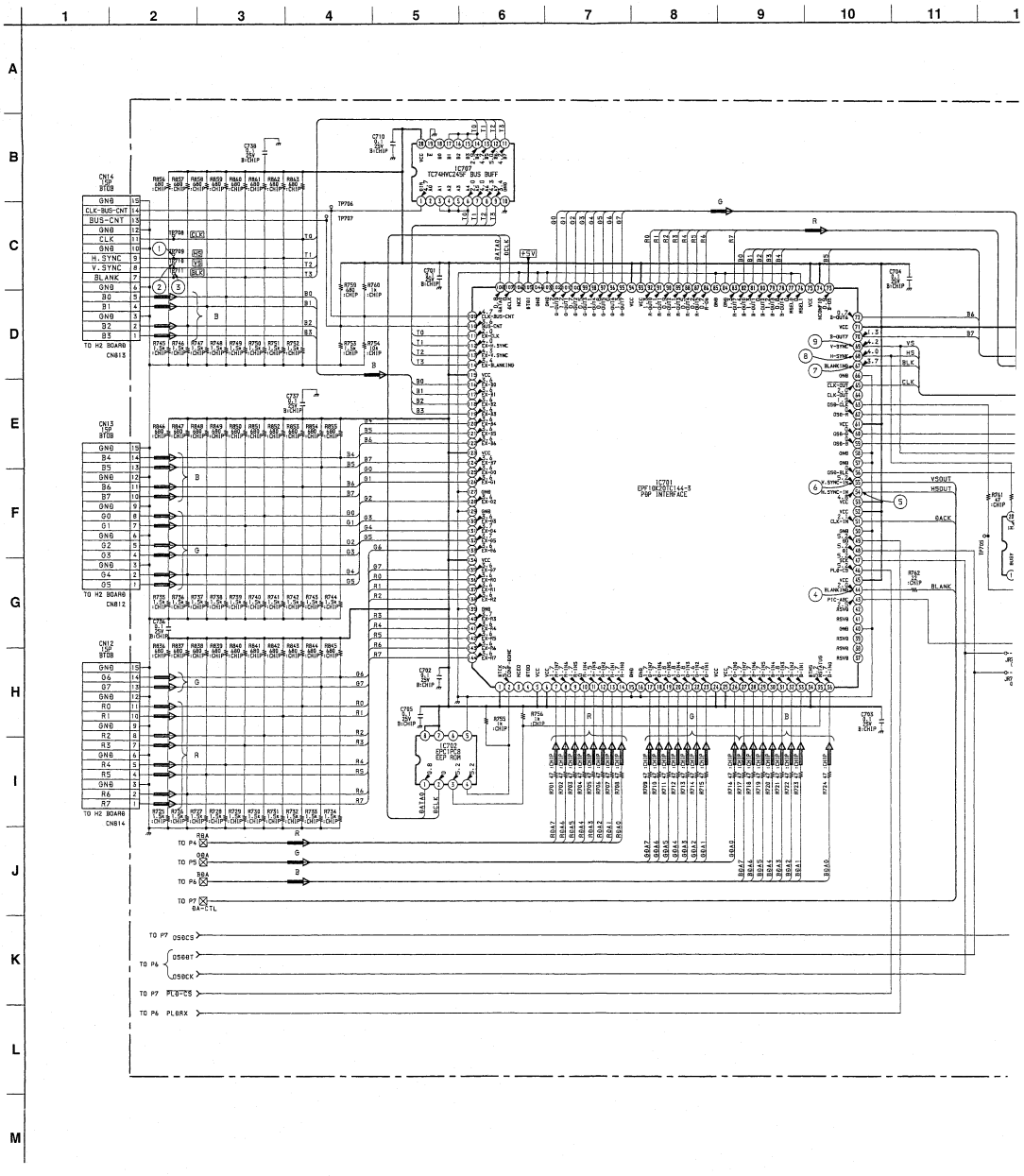

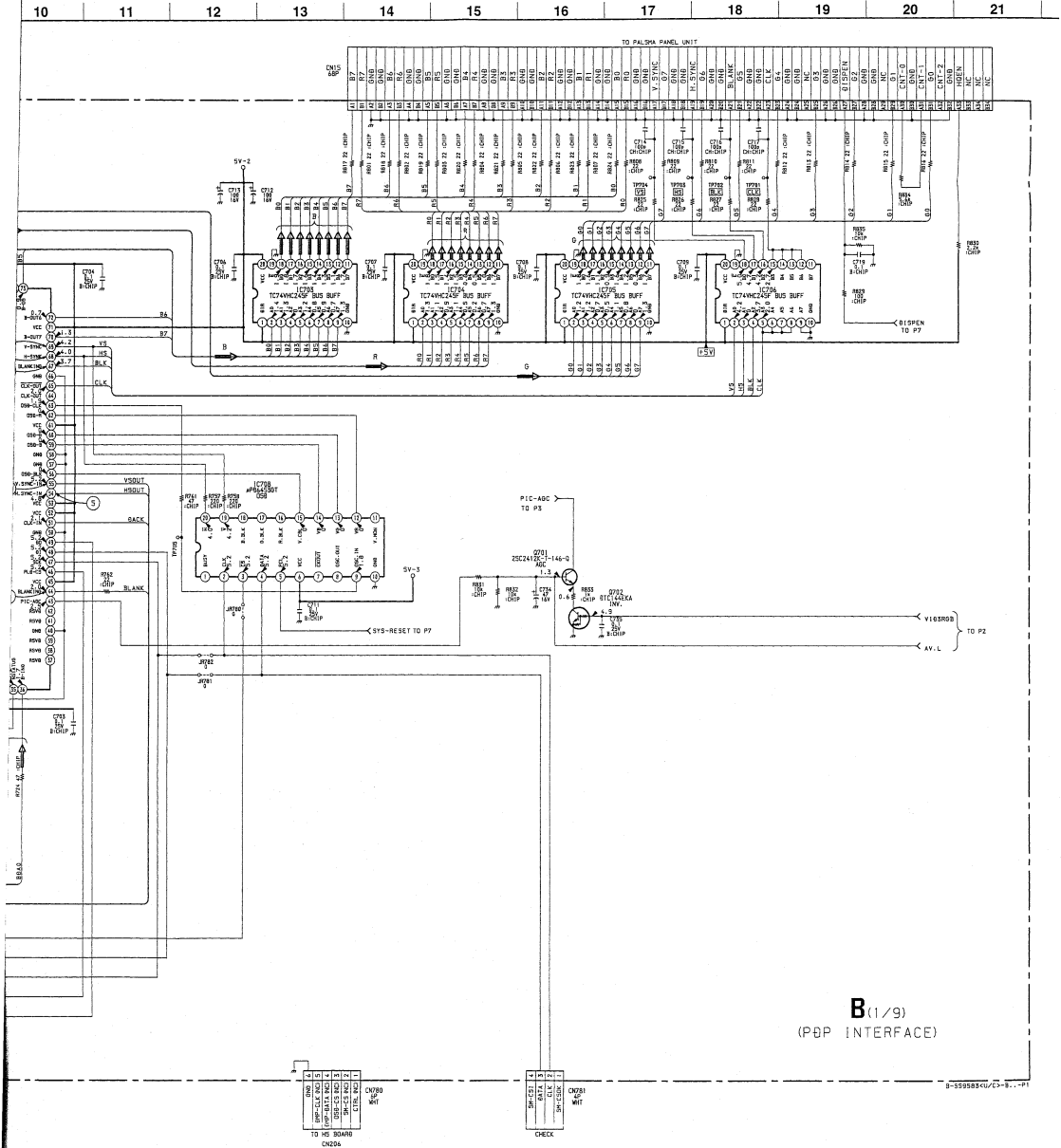
10
11
12
13
14
15
16
17
18
19
20
21
TO PALSMA PANEL UNIT
CN15
68P
IC705
TC74VHC245F BUS BUFF
IC704
TC74VHC245F BUS BUFF
IC706
TC74VHC245F BUS BUFF
IC707
TC74VHC245F BUS BUFF
BISPEN
TO P7
+5V
IC708
μPB64530T
OSD
VSOUT
HSOUT
BACK
BLANK
IP709
SYS-RESET TO P7
PIC-AGC
TO P3
2SC2412K-T146-Q
Q701
STC144KKA
Q702
V163RGB
AV.L
TO P2
JW700
JW701
JW702
CN780
6P
WHT
TO MS BOARD
CN206
CN781
6P
WHT
CHECK
B
(1/9)
(P&P INTERFACE)

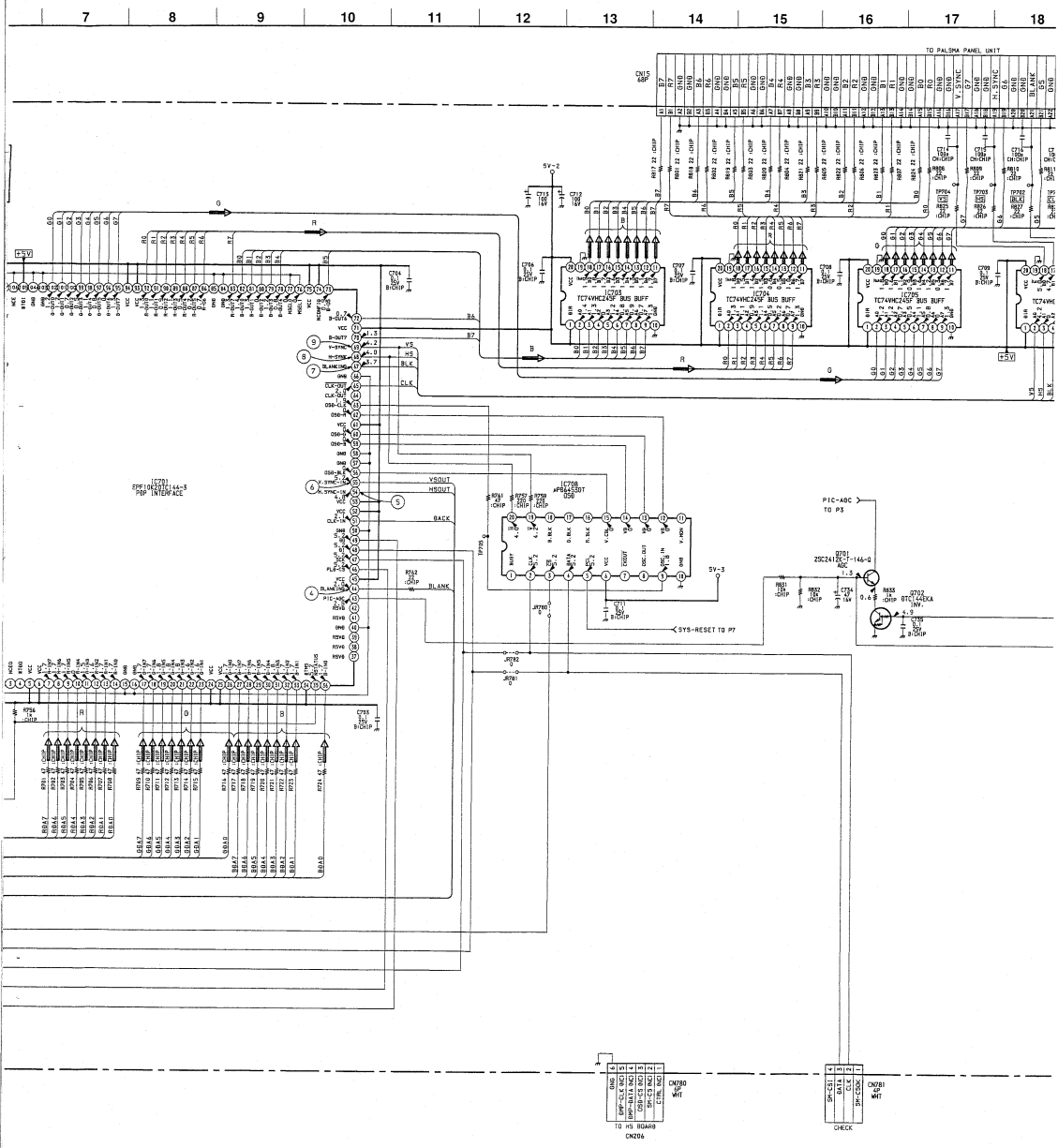
7
8
9
10
11
12
13
14
15
16
17
18
TO PALSMA PANEL UNIT
CN15
68P
IC703
TC74VHC245F BUS BUFF
IC704
TC74VHC245F BUS BUFF
IC705
TC74VHC245F BUS BUFF
IC701
EPF10K20TC144-3
PSP INTERFACE
IC708
JPB64S30T
DSB
PIC-AGC
TO P3
Q701
2SC2412K-T-146-Q
ADC
Q702
DTC144EKA
INV.
SYS-RESET TO P7
CN780
6P
WHT
TO HS BOARD
CN206
CN781
6P
WHT
CHECK

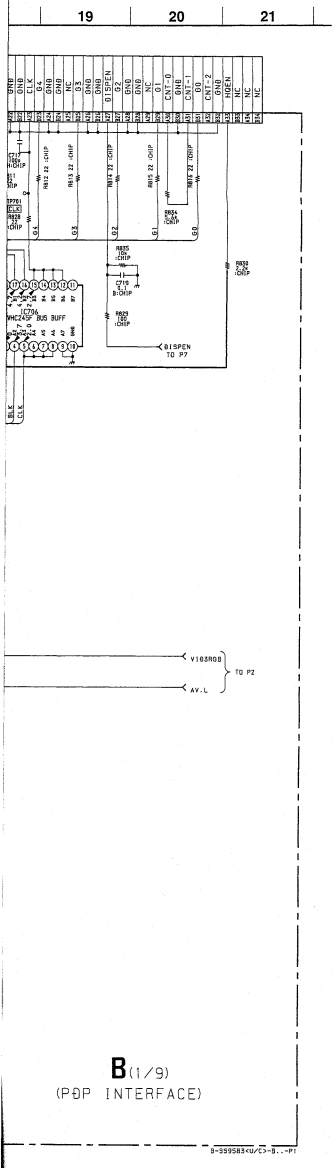

B (1/9) BOARD IC708 UPD6453GT

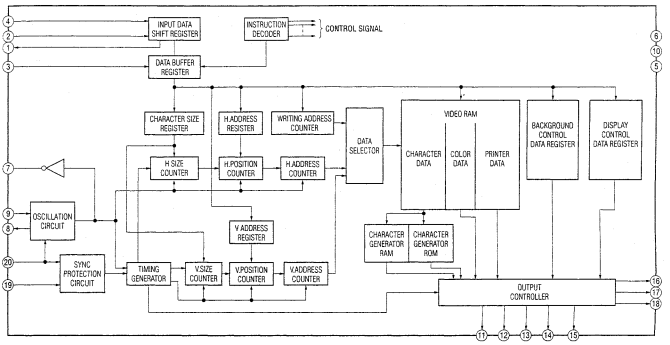

B (1/9) BOARD

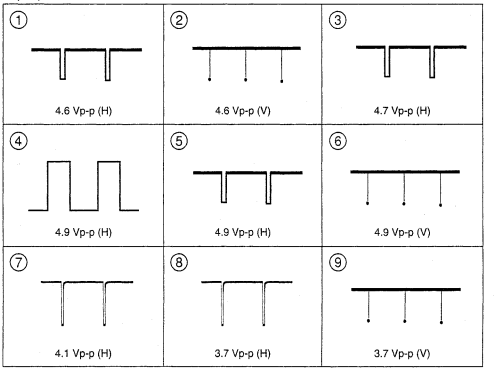

9-9

B (2/9) BOARD

① 2.0 Vp-p (H)	② 1.8 Vp-p (H)	③ 1.9 Vp-p (H)
④ 0.5 Vp-p (H)	⑤ 0.9 Vp-p (H)	⑥ 1.6 Vp-p (H)
⑦ 1.2 Vp-p (500kHz)	⑧ 4.0 Vp-p (H)	⑨ 4.0 Vp-p (V)
⑩ 0.3 Vp-p (3.58MHz)	⑪ 1.2 Vp-p (H)	⑫ 1.2 Vp-p (H)
⑬ 0.8 Vp-p (H)	⑭ 1.1 Vp-p (H)	⑮ 1.1 Vp-p (H)
⑯ 0.8 Vp-p (H)	⑰ 1.1 Vp-p (H)	⑱ 1.1 Vp-p (H)
⑲ 1.1 Vp-p (H)		

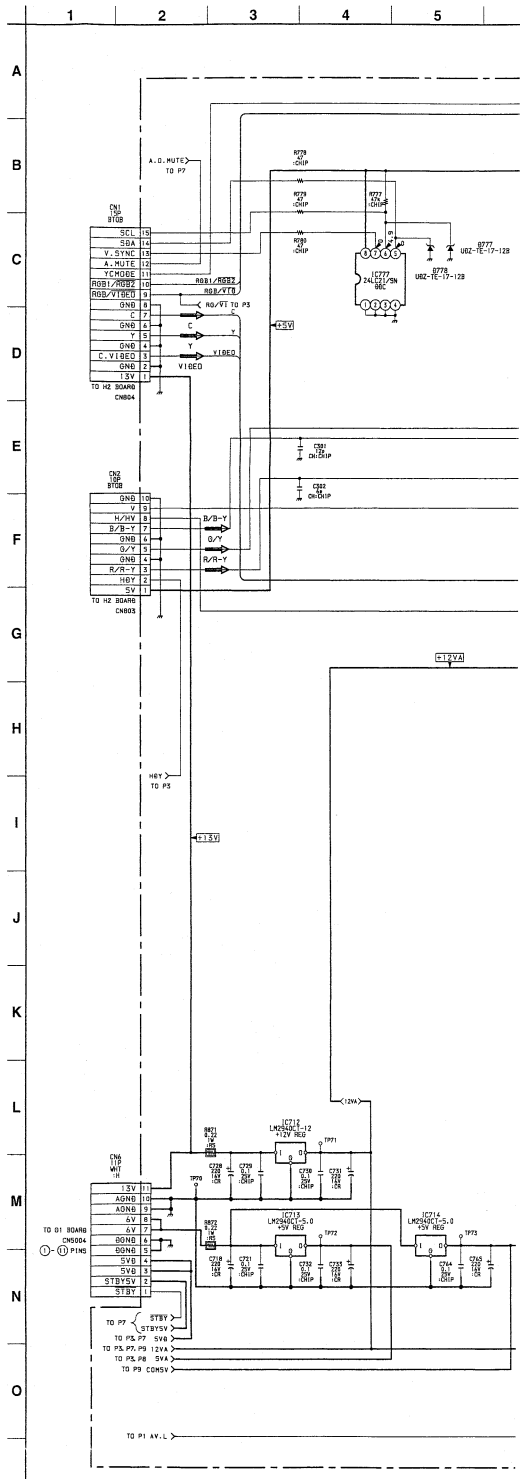

9-10

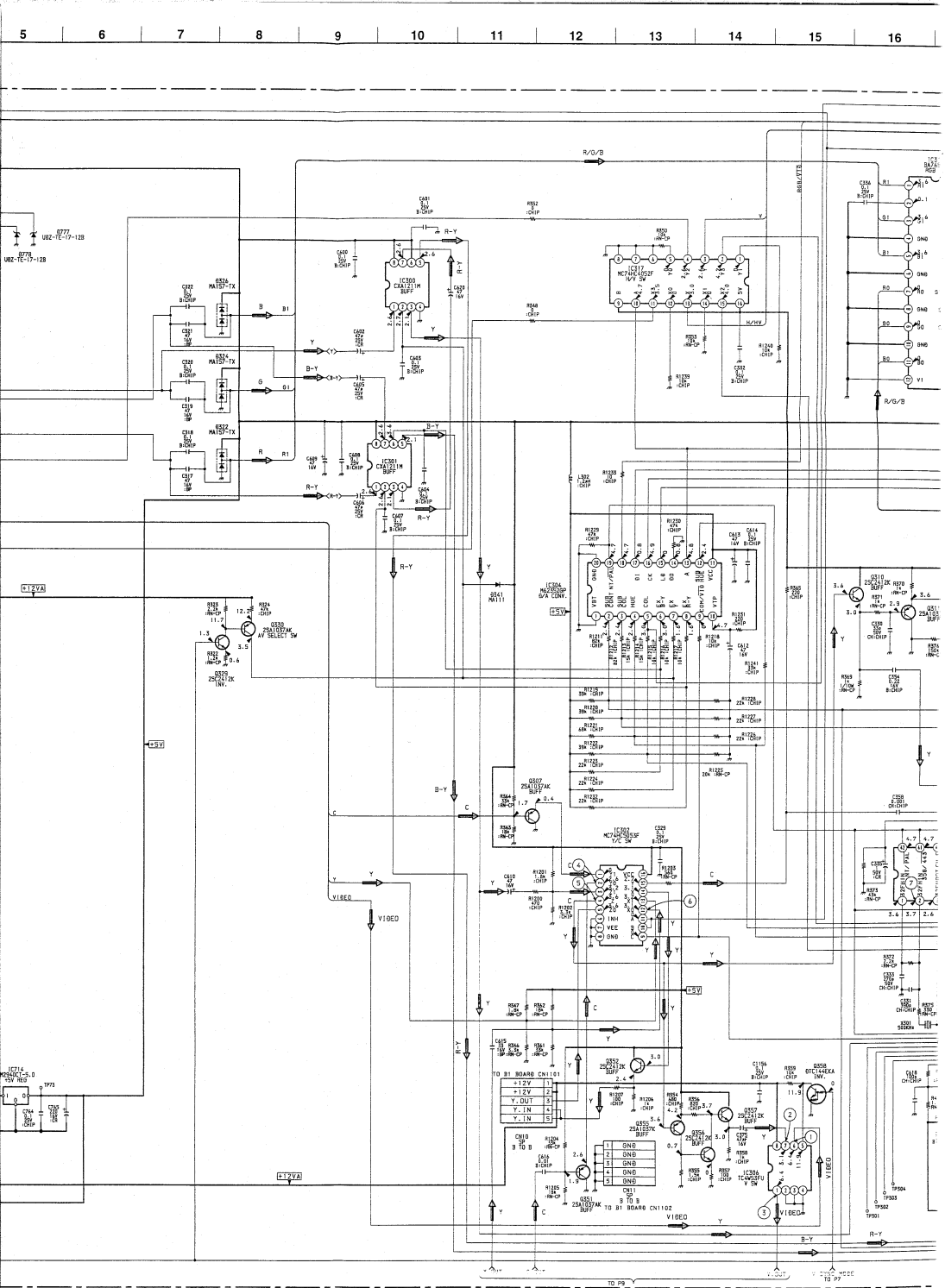
5
6
7
8
9
10
11
12
13
14
15
16
R/G/B
IC300 CXA1211M BUFF
IC301 CXA1211M BUFF
IC302 MC74HC4052F Y/C SW
IC304 M62250SP G/A CONV.
IC306 TC4W53FU V SW
IC317 MC74HC4052F H/V SW
Q330 2SA1037AK AV SELECT SW
Q329 2SC2412K INV.
Q307 2SA1037AK BUFF
Q352 2SC2412K BUFF
Q355 2SA1037K BUFF
Q356 2SC2412K BUFF
Q357 2SC2412K BUFF
Q358 DTC144EKA INV.
Q351 2SA1037AK BUFF
Q310 2SC2412K BUFF
Q311 2SA1037 BUFF
Q321 2SA1037AK BUFF
Q322 2SC2412K BUFF
Q324 MA157-TX
Q326 MA157-TX
Q332 MA157-TX
Q341 MA111
Q377 UBZ-TE-17-12B
Q378 UBZ-TE-17-12B
IC714 MC9SCT-5.0 +5V REG
TO B1 BOARD CN1101
TO B1 BOARD CN1102
CN10 SP B TO B
CN11 SP B TO B
+12VA
+5V
VIDEO
B-Y
R-Y
TO P9
TO P7

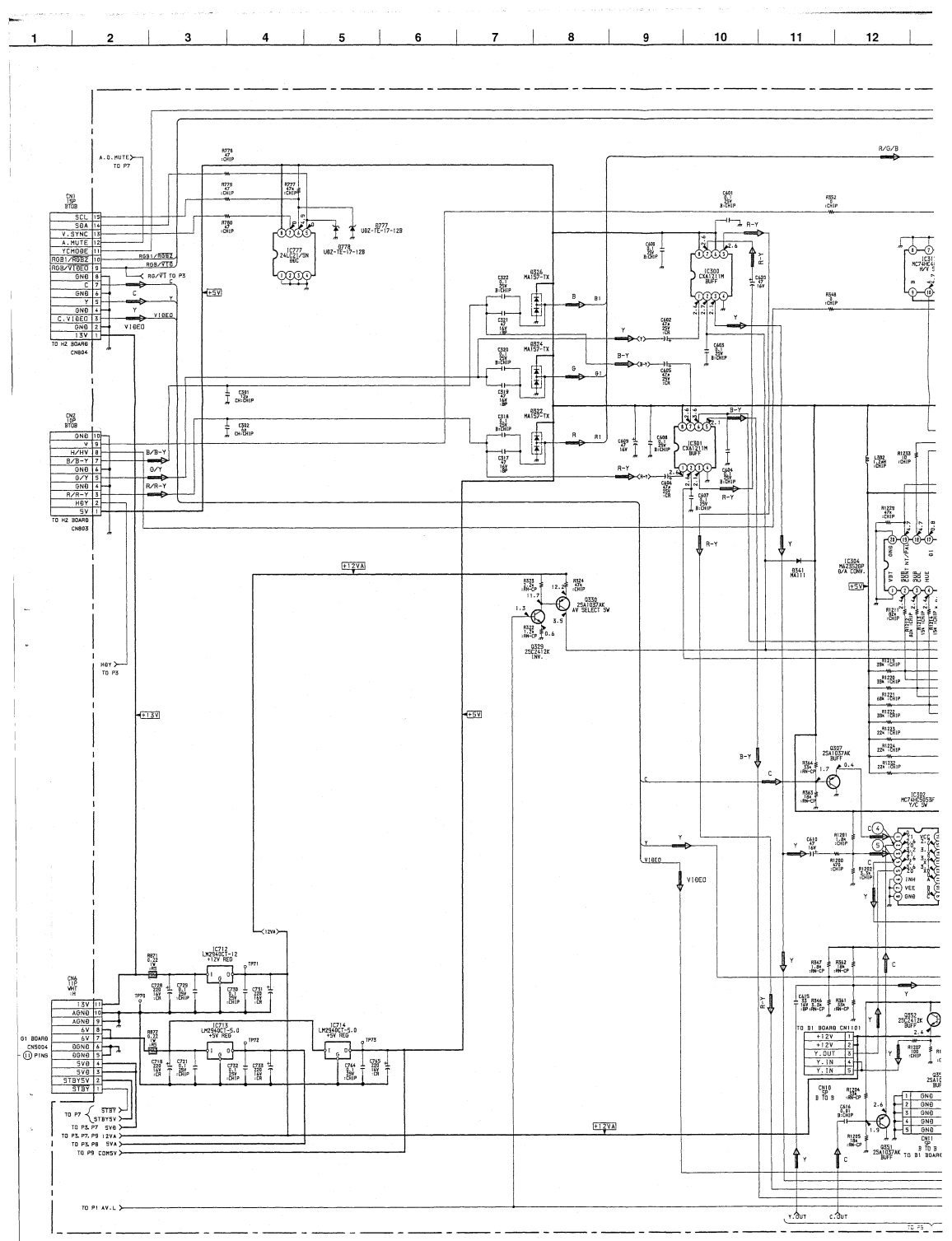

1
2
3
4
5
6
7
8
9
10
11
12
CN1 15P BTOB
SCL
SDA
V.SYNC
A.MUTE
YCMODE
RGB1/RGB2
RGB/VIDEO
GND
C
GND
Y
GND
C.VIDEO
GND
13V
TO H2 BOARD CN804
CN2 10P BTOB
GND
V
H/HV
B/B-Y
GND
G/Y
GND
R/R-Y
HGY
5V
TO H2 BOARD CN803
A.O.MUTE TO P7
RGB1/RGB2
RGB/VIDEO
RG/VT TO P3
VIDEO
+5V
IC277 24LC21/SN 8DC
R778 UBZ-TE-17-12B
R777 47K CHIP
R779 47K CHIP
R780 47K CHIP
R774 47K CHIP
R777 47K CHIP
R778 UBZ-TE-17-12B
Q326 MA157-TX
Q324 MA157-TX
Q322 MA157-TX
IC300 CXA1211M BUFF
IC301 CXA1211M BUFF
IC304 M62520DP 0/A CONV.
IC307 MC74HC5353F 1/C SW
IC311 NC74HC4 H/V
R/G/B
R-Y
B-Y
B1
G1
R1
Q330 2SA1037AK AV SELECT SW
Q329 2SC2412K INV.
Q341 MA111
Q307 2SA1037AK BUFF
Q352 2SC2412K BUFF
Q351 2SA1037AK BUFF
+12VA
+13V
HGY TO P3
IC712 LM2940CT-12 +12V REG
IC713 LM2940CT-5.0 +5V REG
IC714 LM2940CT-5.0 +5V REG
CN6 11P WHT IH
13V
AGND
AGND
6V
6V
DGND
DGND
5VB
5VB
STBY5V
STBY
G1 BOARD CN5004 11 PINS
TO P7
TO P3, P7 5VB
TO P3, P7, P9 12VA
TO P3, P8 5VA
TO P9 COMSV
TO P1 AV.L
TO B1 BOARD CN1101
+12V
+12V
Y.OUT
Y.IN
Y.IN
CN10 SP B TO B
CN11 SP B TO B
Y.OUT
C.OUT

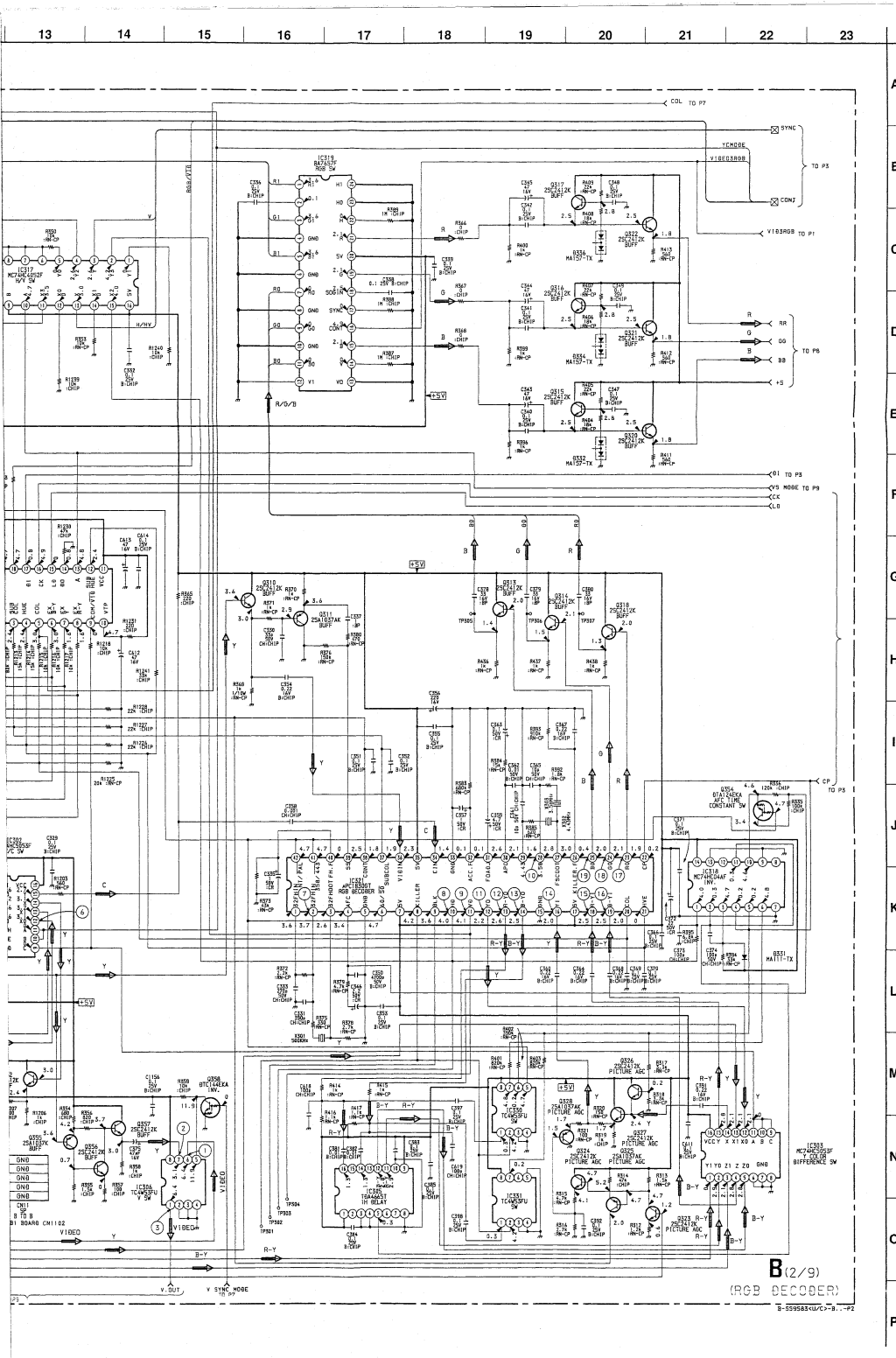

9-10

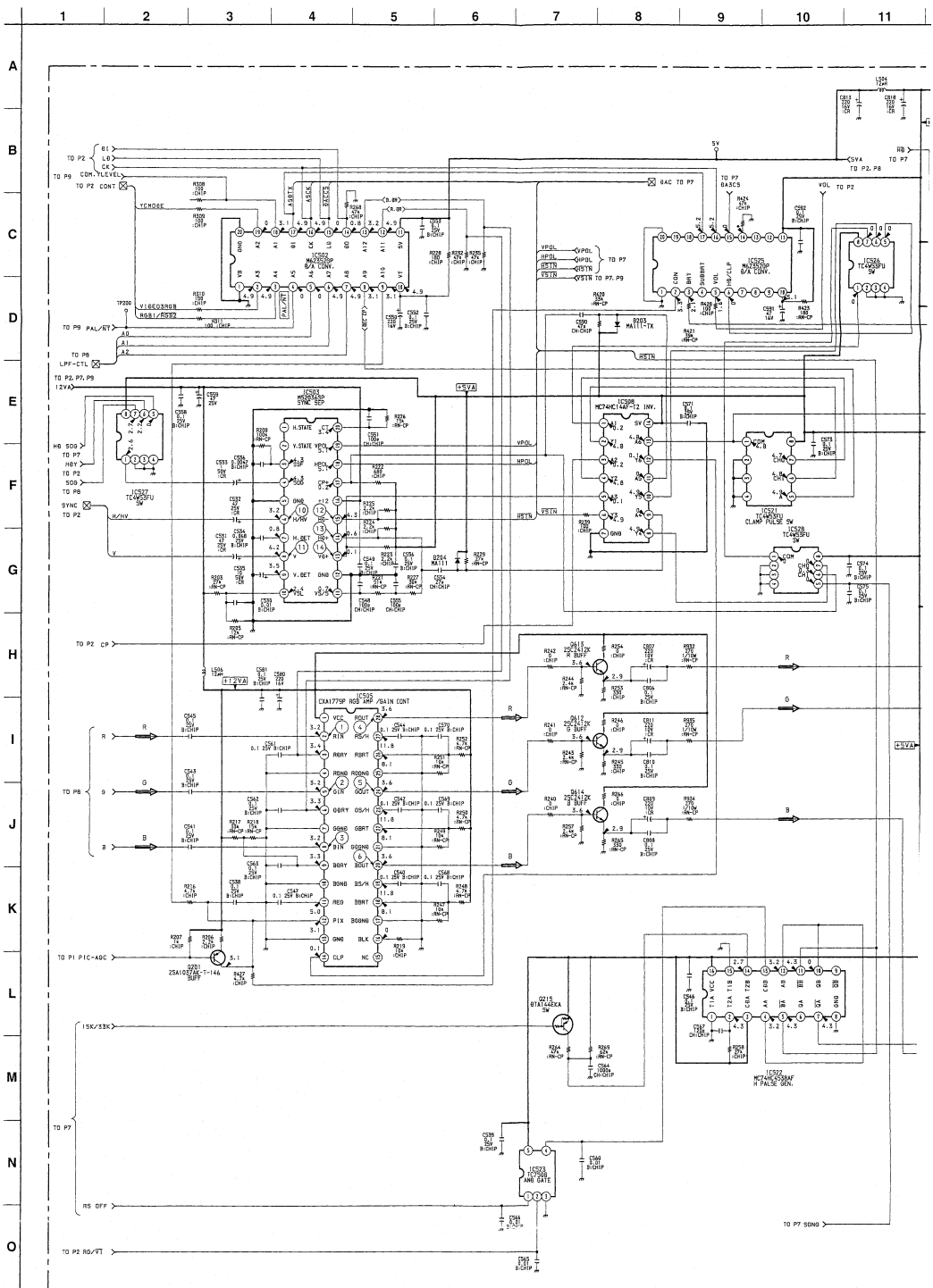

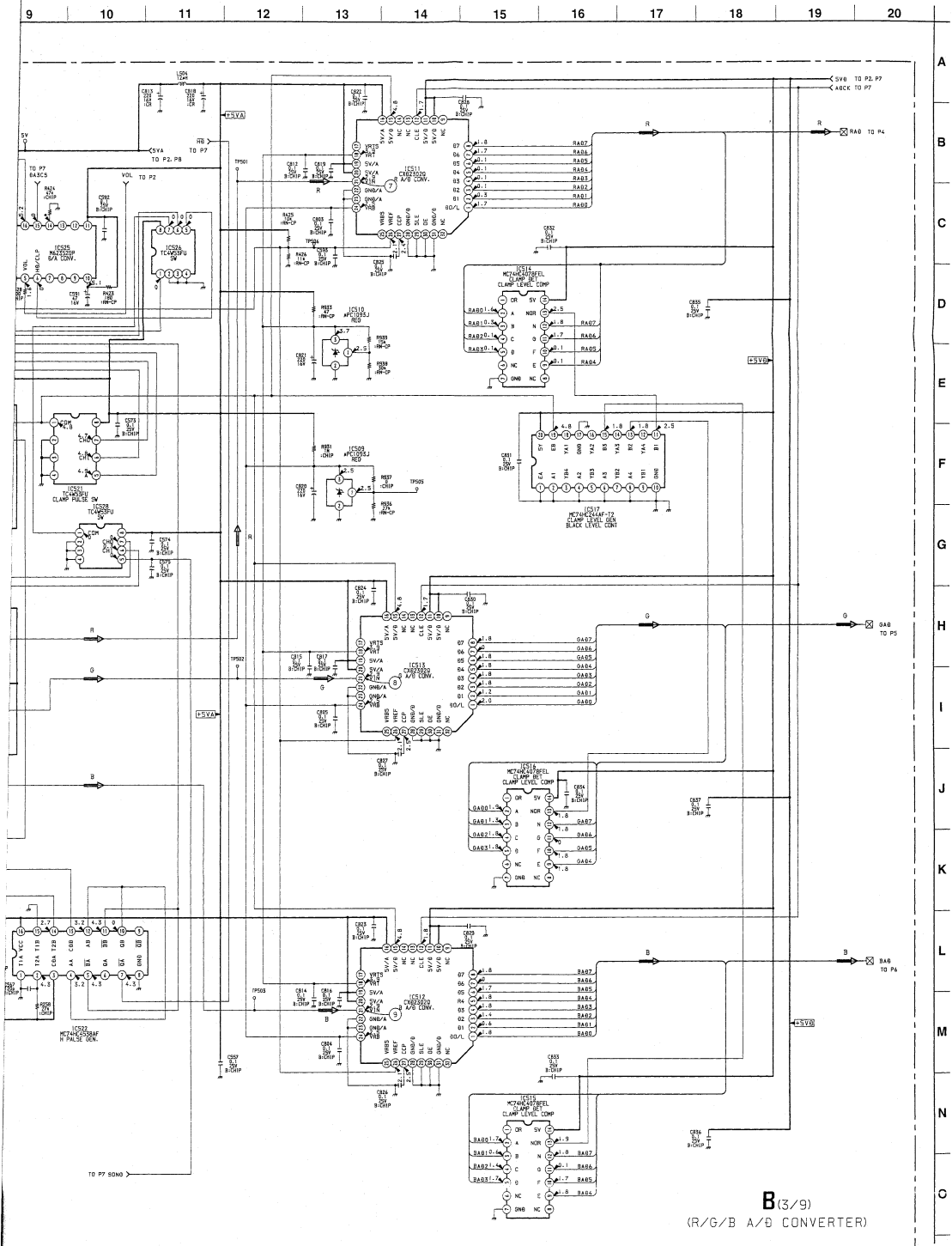

9
10
11
12
13
14
15
16
17
18
19
20
A
B
C
D
E
F
G
H
I
J
K
L
M
N
O
SVO TO P2, P7
ABCK TO P7
RAO TO P4
GAO TO P5
BAO TO P6
TO P7 SONO
+5VA
+5VD
IC511 CXB2302Q A/D CONV.
IC512 CXB2302Q A/D CONV.
IC513 CXB2302Q A/D CONV.
IC514 MC74HC4078FEL CLAMP LEVEL COMP
IC515 MC74HC4078FEL CLAMP LEVEL COMP
IC516 MC74HC4078FEL CLAMP LEVEL COMP
IC517 MC74HC244AF-T2 CLAMP LEVEL GEN BLACK LEVEL CONT
IC522 MC74HC5328AF H PULSE GEN.
IC525 MB2352DP B/A CONV.
IC526 TC4W53FU SW
IC521 TC4W53FU CLAMP PULSE SW
IC528 TC4W53FU SW
IC509 #PC1093J REG
IC510 #PC1093J REG
TP501
TP502
TP503
TP504
TP505
B(3/9)
(R/G/B A/D CONVERTER)
B-559583<U/C>-B..-P3

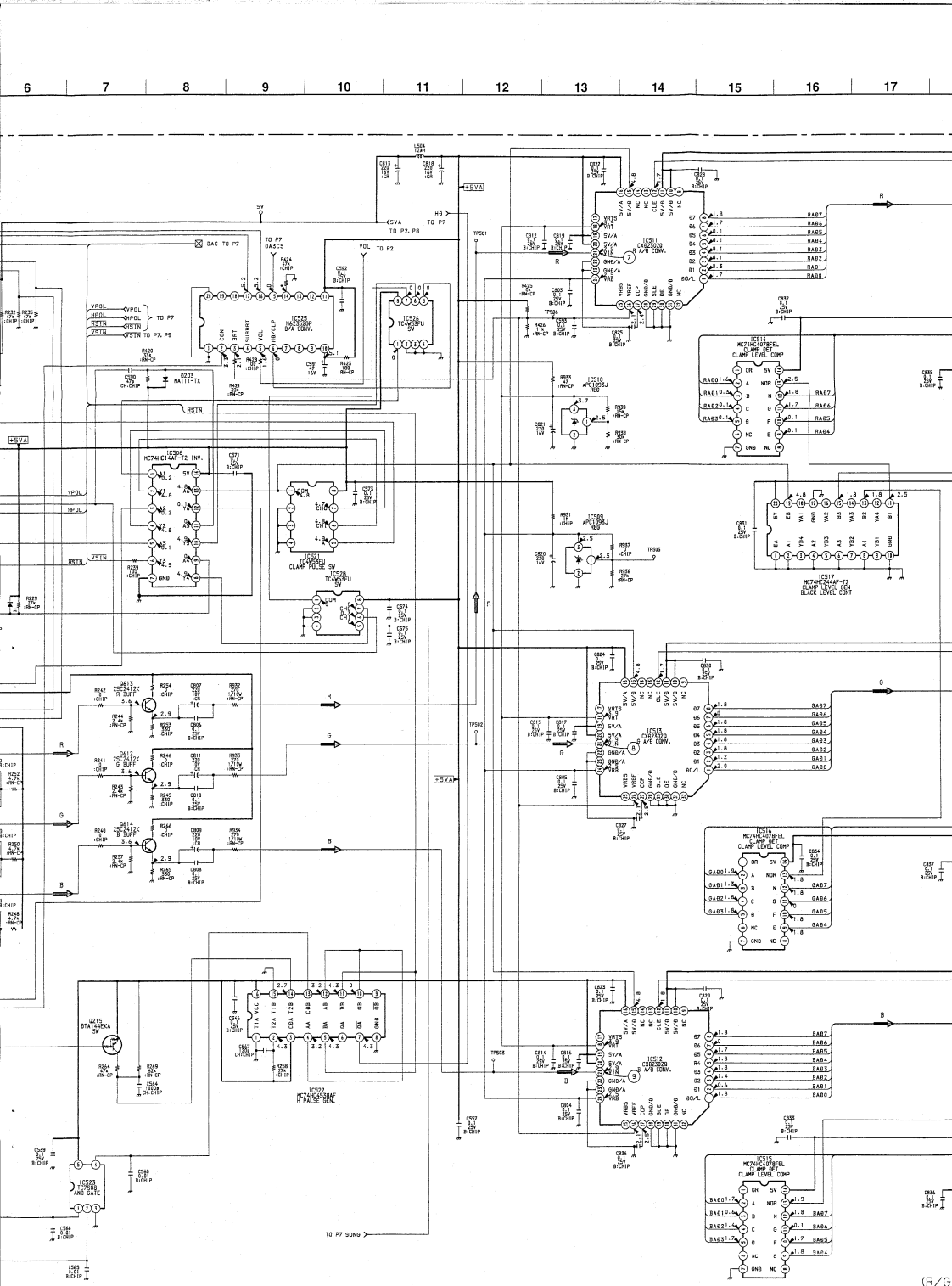
6
7
8
9
10
11
12
13
14
15
16
17
IC525 MC2S3020P B/A CONV.
IC526 TC4W53FU 5V
IC508 MC74HC14AF-T2 INV.
IC521 TC4W53FU CLAMP PULSE 5V
IC528 TC4W53FU 5V
IC511 CXB2302Q A/B CONV.
IC514 MC74HC4078FEL CLAMP SET CLAMP LEVEL COMP
IC510 μPC1093J REG
IC509 μPC1093J REG
IC517 MC74HC244AF-T2 CLAMP LEVEL GEN BLACK LEVEL CONT
IC513 CXB2302Q A/B CONV.
IC516 MC74HC4078FEL CLAMP SET CLAMP LEVEL COMP
IC512 CXB2302Q A/B CONV.
IC515 MC74HC4078FEL CLAMP SET CLAMP LEVEL COMP
IC522 MC74HC4538AF H PULSE GEN.
IC523 TC7S08 AND GATE
Q215 BTA144EKA 5V
Q203 MA111-TX
Q613 2SC2412K R BUFF
Q612 2SC2412K G BUFF
Q614 2SC2412K B BUFF
TO P7 SONG
(R/G

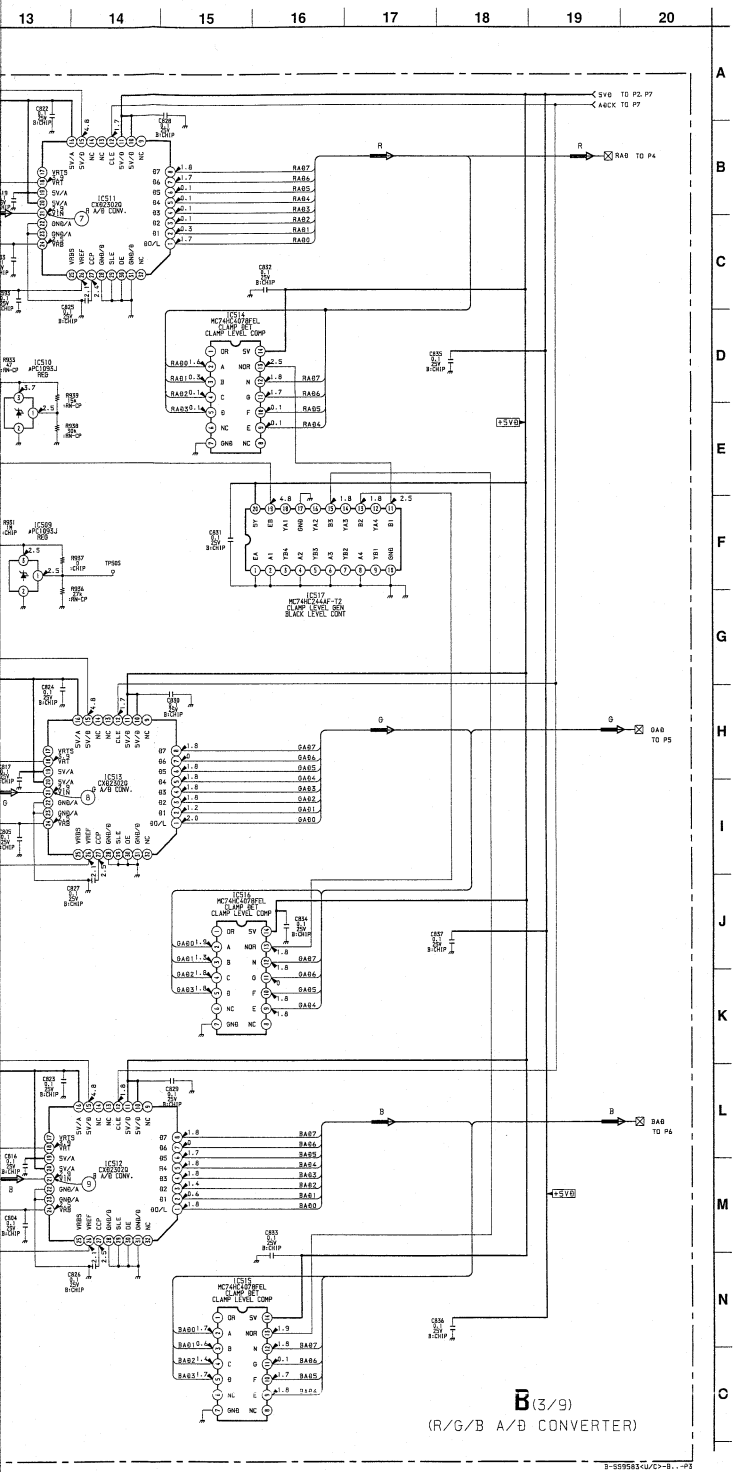
13
14
15
16
17
18
19
20
A
B
C
D
E
F
G
H
I
J
K
L
M
N
O
SV0 TO P2, P7
A0CK TO P7
RA0 TO P4
GA0 TO P5
BA0 TO P6
IC511 CXD2302Q A/D CONV.
IC512 CXD2302Q A/D CONV.
IC513 CXD2302Q A/D CONV.
IC514 MC74HC4078FEL CLAMP SET CLAMP LEVEL COMP
IC515 MC74HC4078FEL CLAMP SET CLAMP LEVEL COMP
IC516 MC74HC4078FEL CLAMP SET CLAMP LEVEL COMP
IC517 MC74HC244AF-T2 CLAMP LEVEL GEN BLACK LEVEL CONT
IC510 μPC1093J RES
IC509 μPC1093J RES
+5V0
B (3/9)
(R/G/B A/D CONVERTER)
B-SS95834<U/C>-B..-P3

B (3/9) BOA

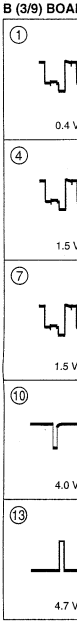
①
0.4 V
④
1.5 V
⑦
1.5 V
⑩
4.0 V
⑬
4.7 V

9-11

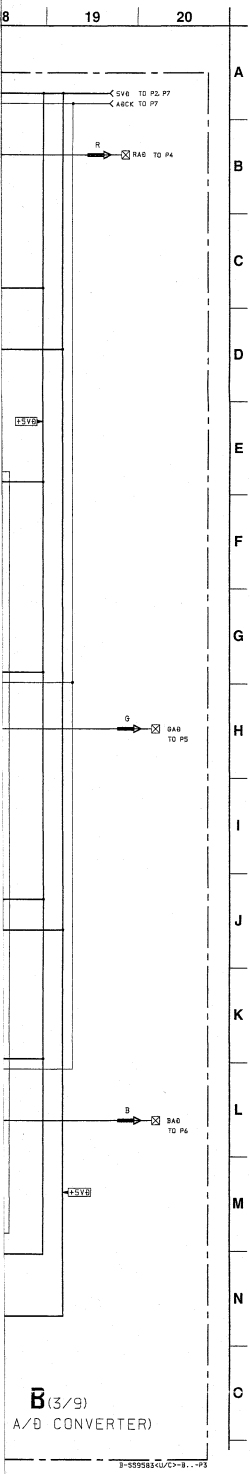

B (3/9) BOARD

① 0.4 Vp-p (H)	② 0.4 Vp-p (H)	③ 0.4 Vp-p (H)
④ 1.5 Vp-p (H)	⑤ 1.5 Vp-p (H)	⑥ 1.5 Vp-p (H)
⑦ 1.5 Vp-p (H)	⑧ 1.5 Vp-p (H)	⑨ 1.5 Vp-p (H)
⑩ 4.0 Vp-p (H)	⑪ 4.0 Vp-p (V)	⑫ 4.7 Vp-p (H)
⑬ 4.7 Vp-p (H)	⑭ 4.8 Vp-p (V)	

9-11

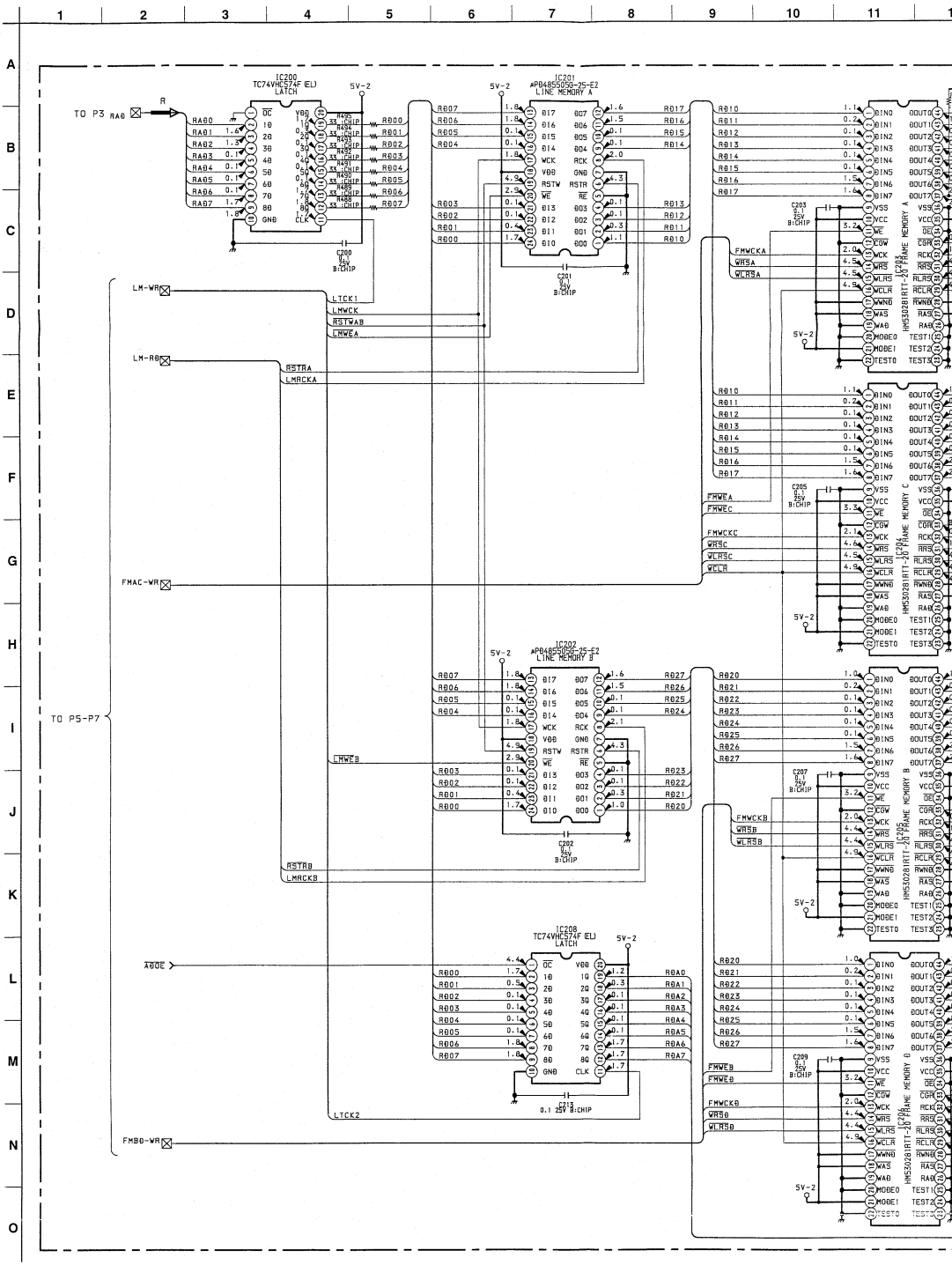

TO P3
TO P5-P7
IC200
TC74VHC574F (EL)
LATCH
IC201
μPD4855050-25-E2
LINE MEMORY A
IC202
μPD4855050-25-E2
LINE MEMORY B
IC208
TC74VHC574F (EL)
LATCH
IC203
HM530281RTT-20 FRAME MEMORY A
IC204
HM530281RTT-20 FRAME MEMORY C
IC205
HM530281RTT-20 FRAME MEMORY B
IC206
HM530281RTT-20 FRAME MEMORY D
LM-WR
LM-RD
FMAC-WR
LMWEB
RSTRB
LMRCKB
LTCK1
LMWCK
RSTWAB
LMWEA
RSTRA
LMRCKA
LTCK2
FMWCKA
WRSA
WLRSA
FMWEA
FMWEC
FMWCKC
WRSC
WLRSC
WCLR
FMWCKB
WRSB
WLRSB
FMWEB
FMWED
FMWCKD
WRSD
WLRSD
5V-2

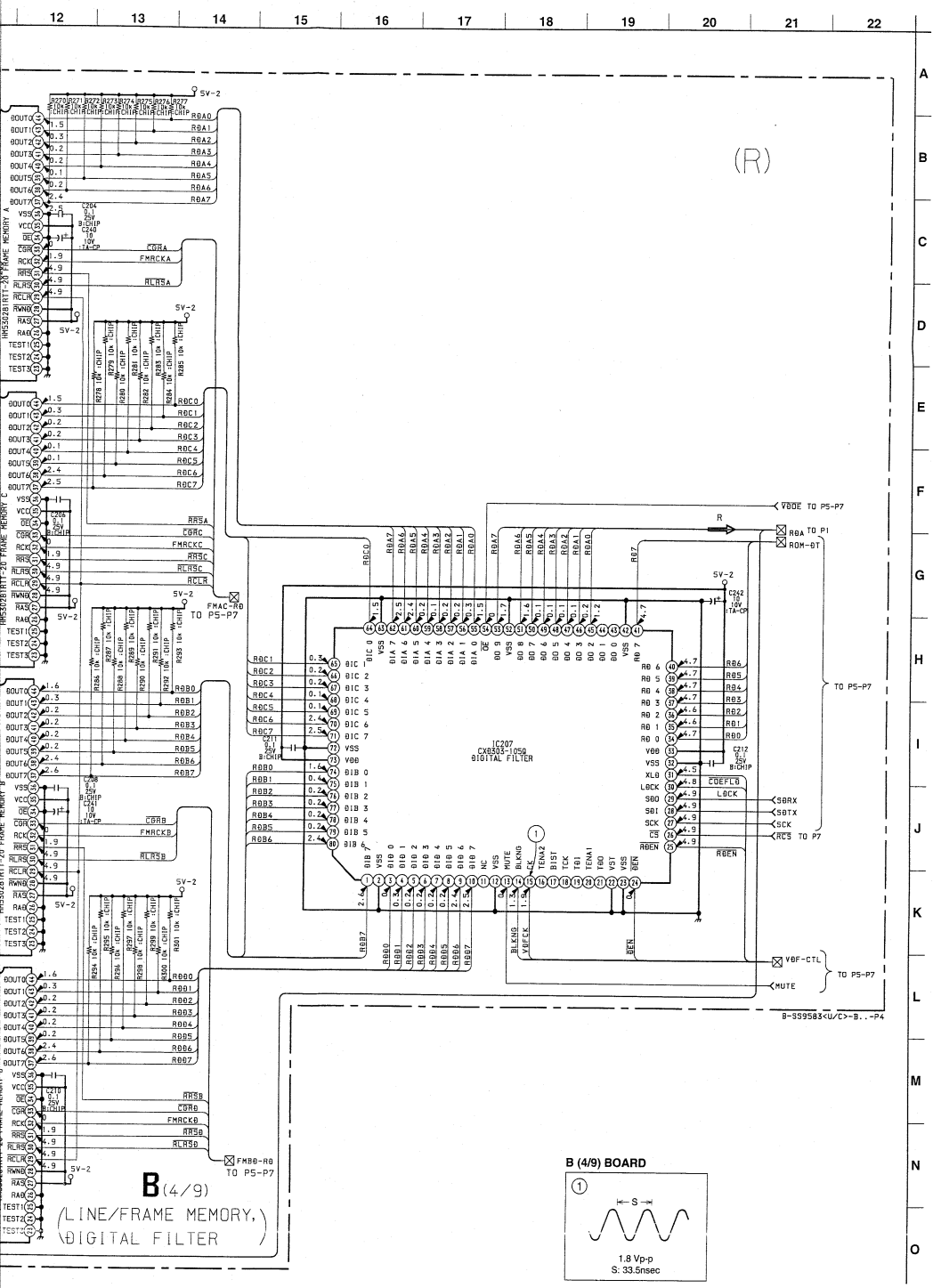

(R)
IC207
CX8303-1050
DIGITAL FILTER
HM53028IRTT-20 FRAME MEMORY A
HM53028IRTT-20 FRAME MEMORY C
HM53028IRTT-20 FRAME MEMORY B
VDDE TO P5-P7
RDA TO P1
ROM-DT
TO P5-P7
SDRX
SDTX
SCK
RCS TO P7
VDF-CTL
MUTE
FMAC-RD TO P5-P7
FMBD-RD TO P5-P7
B-SS9583<U/C>-B..-P4
B (4/9)
(LINE/FRAME MEMORY, DIGITAL FILTER)
B (4/9) BOARD
1.8 Vp-p
S: 33.5nsec

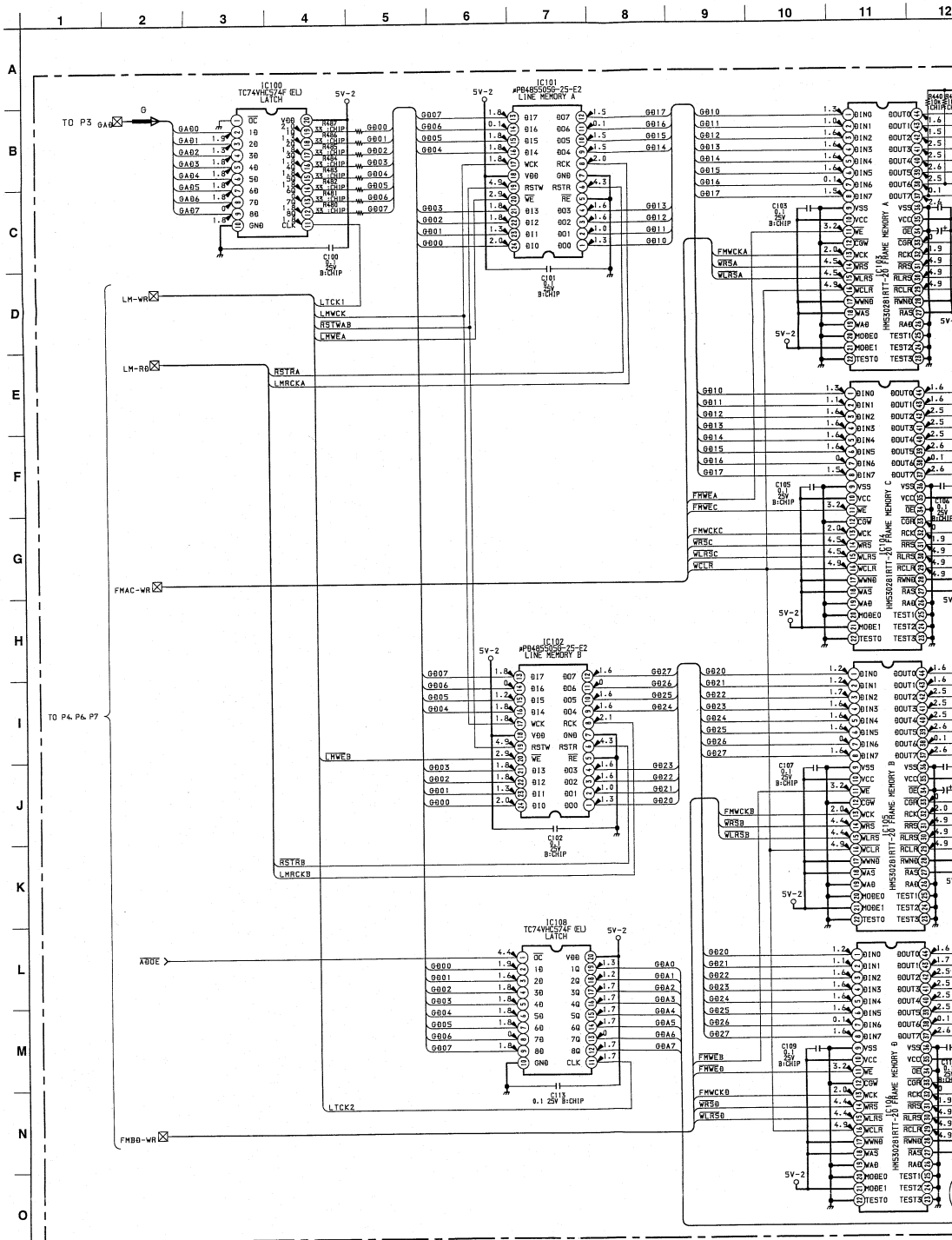

TO P3
IC100
TC74VHC574F (EL)
LATCH
IC101
μPD4855050-25-E2
LINE MEMORY A
IC102
μPD4855050-25-E2
LINE MEMORY B
IC108
TC74VHC574F (EL)
LATCH
IC103
HM53028IRTT-20 FRAME MEMORY A
IC104
HM53028IRTT-20 FRAME MEMORY C
IC105
HM53028IRTT-20 FRAME MEMORY B
IC106
HM53028IRTT-20 FRAME MEMORY D
TO P4, P6, P7
LM-WR
LM-RD
FMAC-WR
ADDE
FMBD-WR
LTCK1
LTCK2
LMWCK
RSTWAB
LMWEA
RSTRA
LMRCKA
LMWEB
RSTRB
LMRCKB
FMWCKA
WRSA
WLRSA
FMWEA
FMWEC
FMWCKC
WRSC
WLRSC
WCLR
FMWCKB
WRSB
WLRSB
FMWEB
FMWEB
FMWCKB
WRSB
WLRSB
5V-2

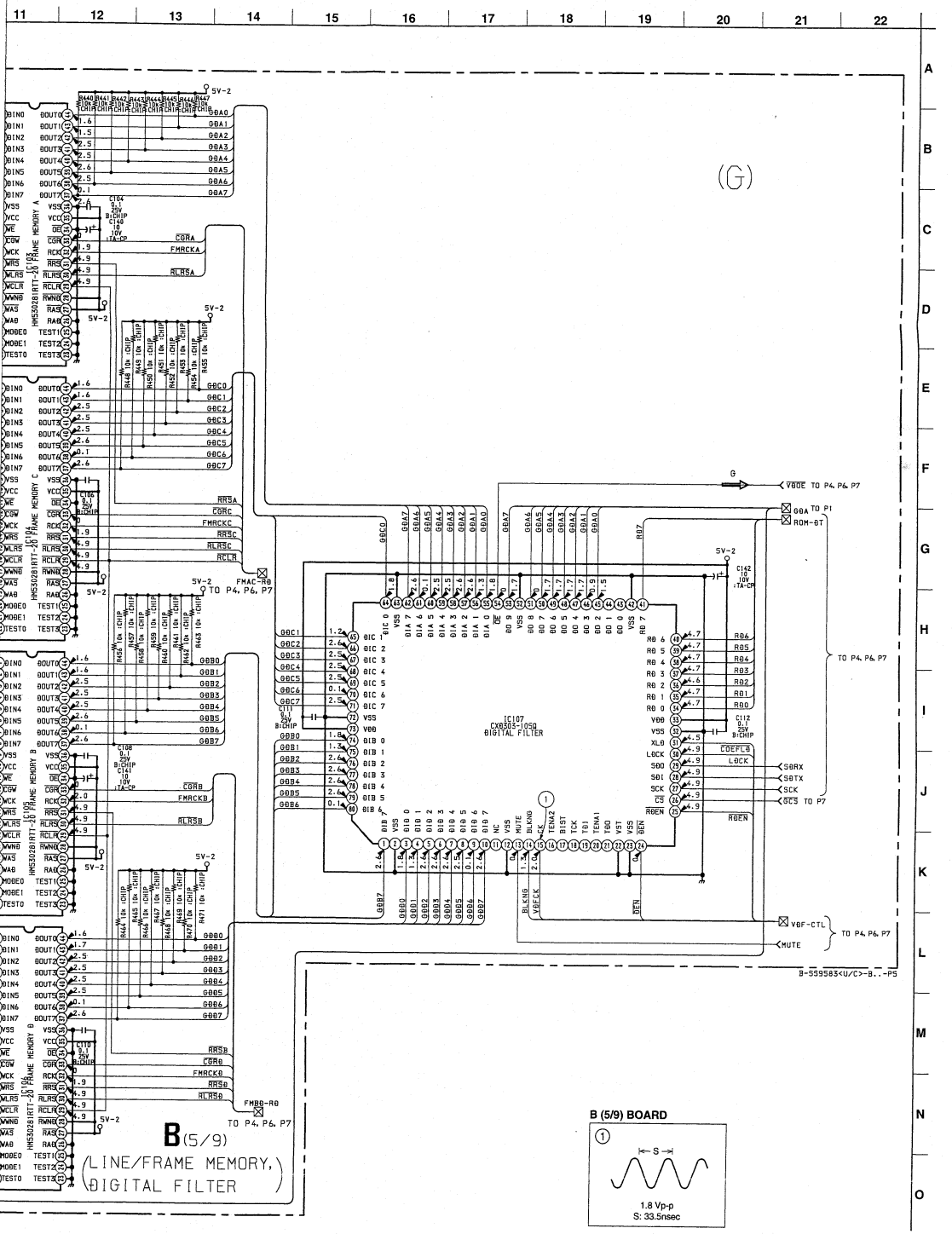
(G)
IC103 HM53028IRTT-20 FRAME MEMORY A
IC104 HM53028IRTT-20 FRAME MEMORY C
IC105 HM53028IRTT-20 FRAME MEMORY B
IC106 HM53028IRTT-20 FRAME MEMORY D
IC107 CX8303-105Q DIGITAL FILTER
FMAC-R0 TO P4, P6, P7
FMBD-R0 TO P4, P6, P7
VDDE TO P4, P6, P7
ROM-DT TO P1
TO P4, P6, P7
SDRX
SDTX
SCK
GCS TO P7
VDF-CTL
MUTE
B-S59583<U/C>-B..-P5
B (5/9)
(LINE/FRAME MEMORY, DIGITAL FILTER)
B (5/9) BOARD
1.8 Vp-p
S: 33.5nsec

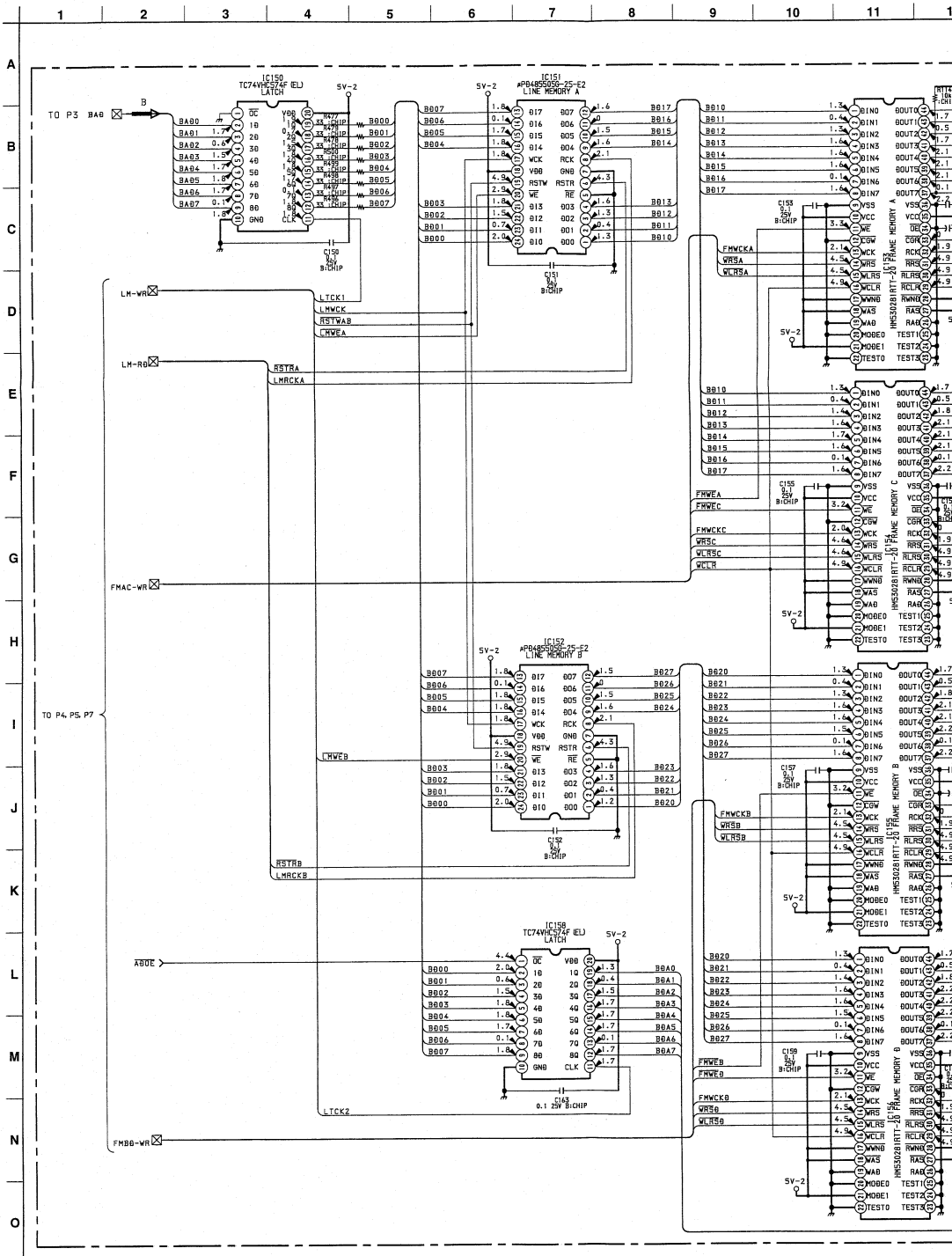
TO P3 BA0
IC150 TC74VHC574F (EL) LATCH
IC151 APD4855056-25-E2 LINE MEMORY A
IC152 APD4855056-25-E2 LINE MEMORY B
IC153 HMS30281BRTT-20 FRAME MEMORY A
IC154 HMS30281BRTT-20 FRAME MEMORY C
IC155 HMS30281BRTT-20 FRAME MEMORY D
IC157 HMS30281BRTT-20 FRAME MEMORY B
IC158 TC74VHC574F (EL) LATCH
IC159 HMS30281BRTT-20 FRAME MEMORY B
5V-2
LM-WR
LM-R0
FMAC-WR
FMB0-WR
TO P4, P5, P7
A0OE
LTCK1
LMWCK
RSTWAB
LMWEA
RSTRA
LMRCKA
LMWEB
RSTRB
LMRCKB
LTCK2
FMWCKA
WRSA
WLRSA
FMWEA
FMWEC
FMWCKC
WRSC
WLRSC
WCLR
FMWCKB
WRSB
WLRSB
FMWEB
FMWED
FMWCKD
WRSD
WLRSD

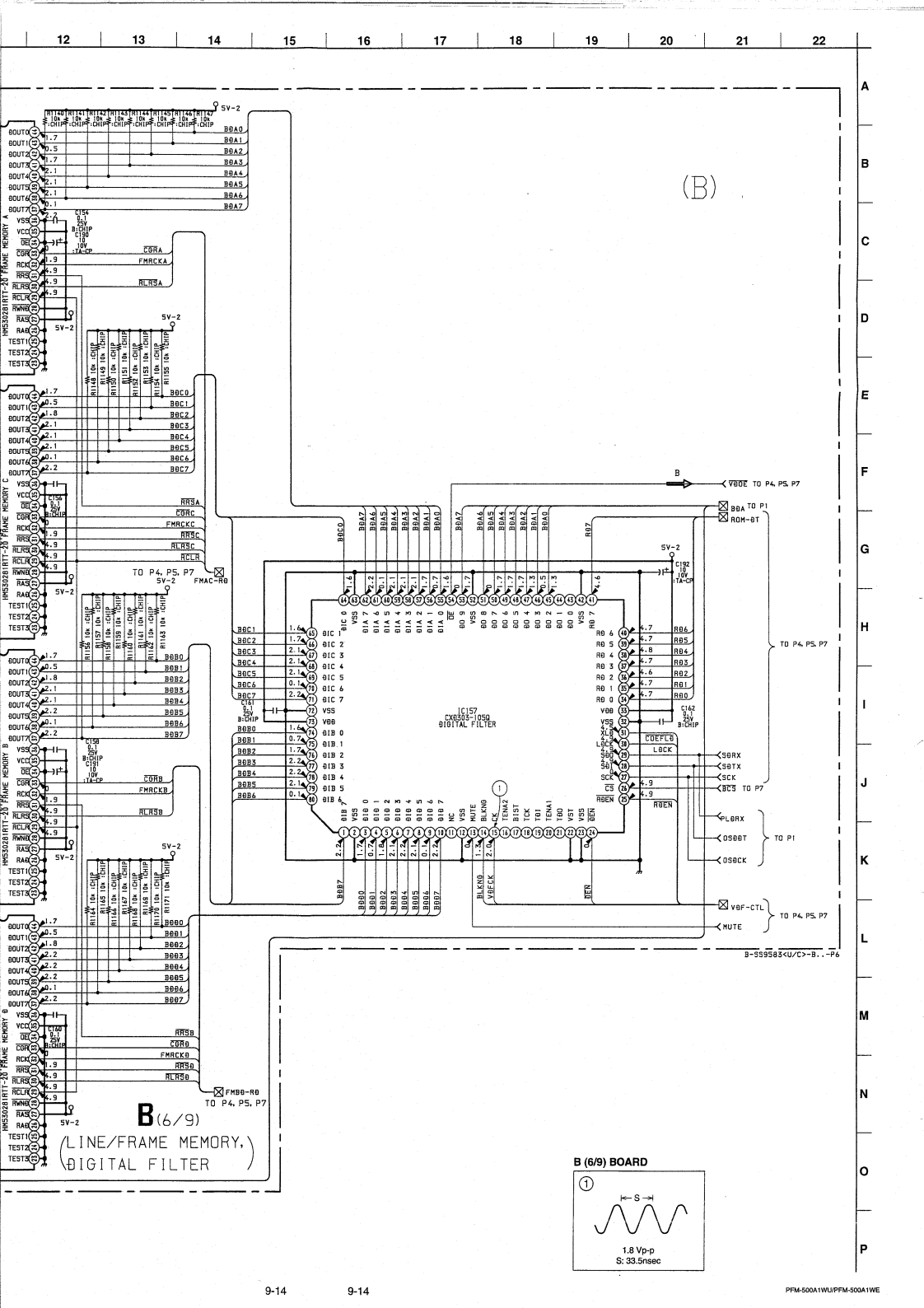

PFM-500A1WU/PFM-500A1WE

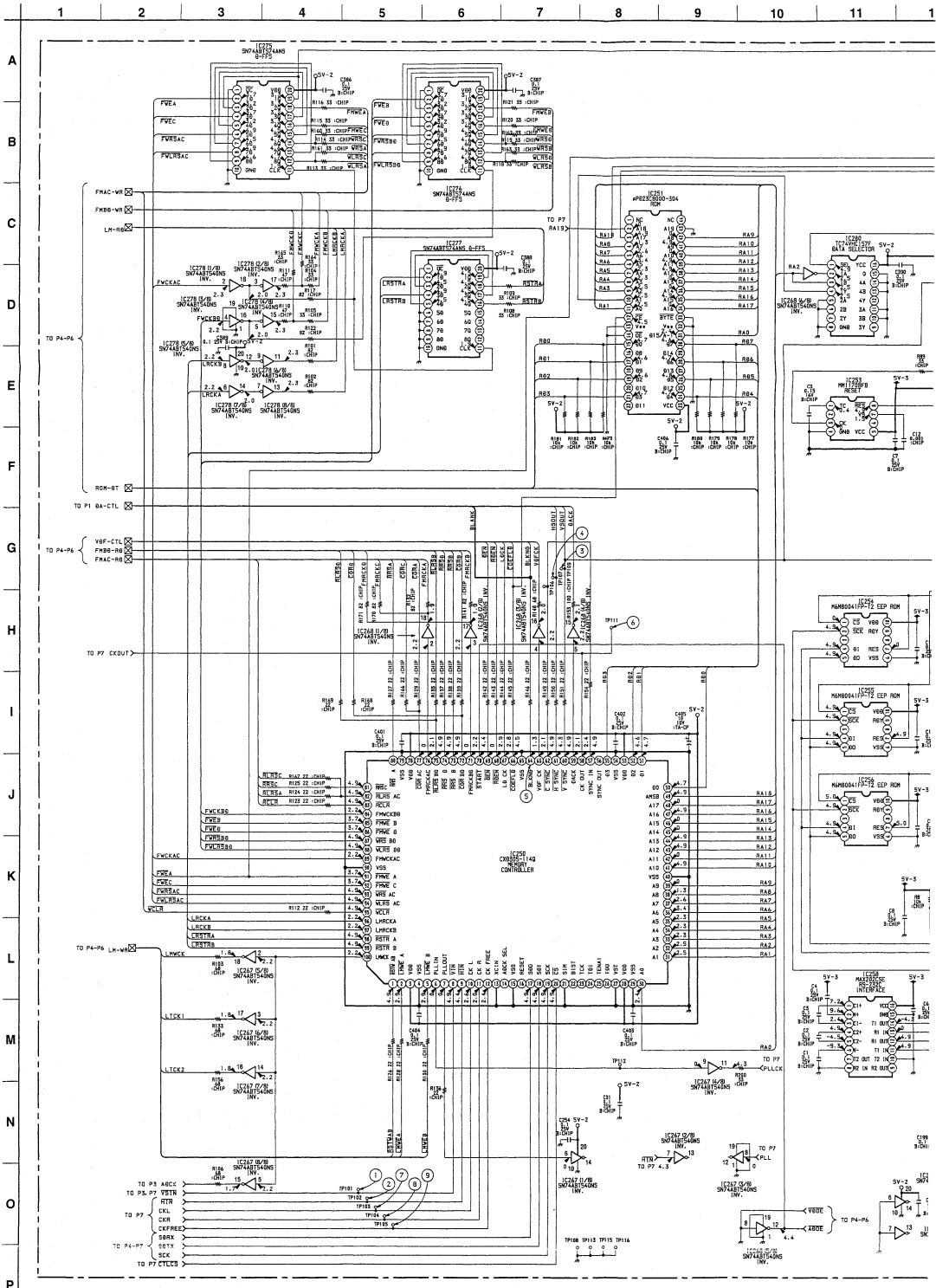

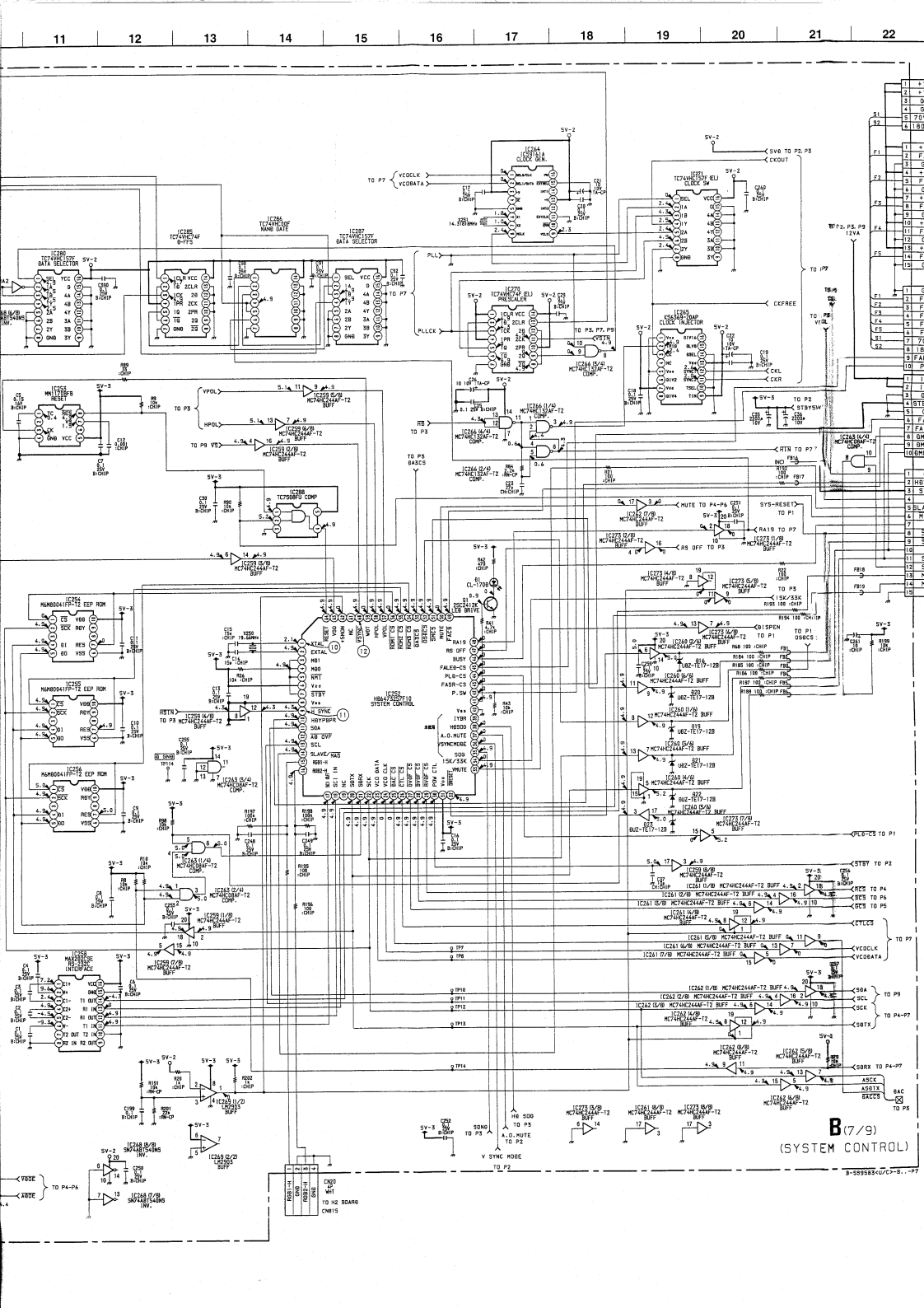
11
12
13
14
15
16
17
18
19
20
21
22
B (7/9)
(SYSTEM CONTROL)

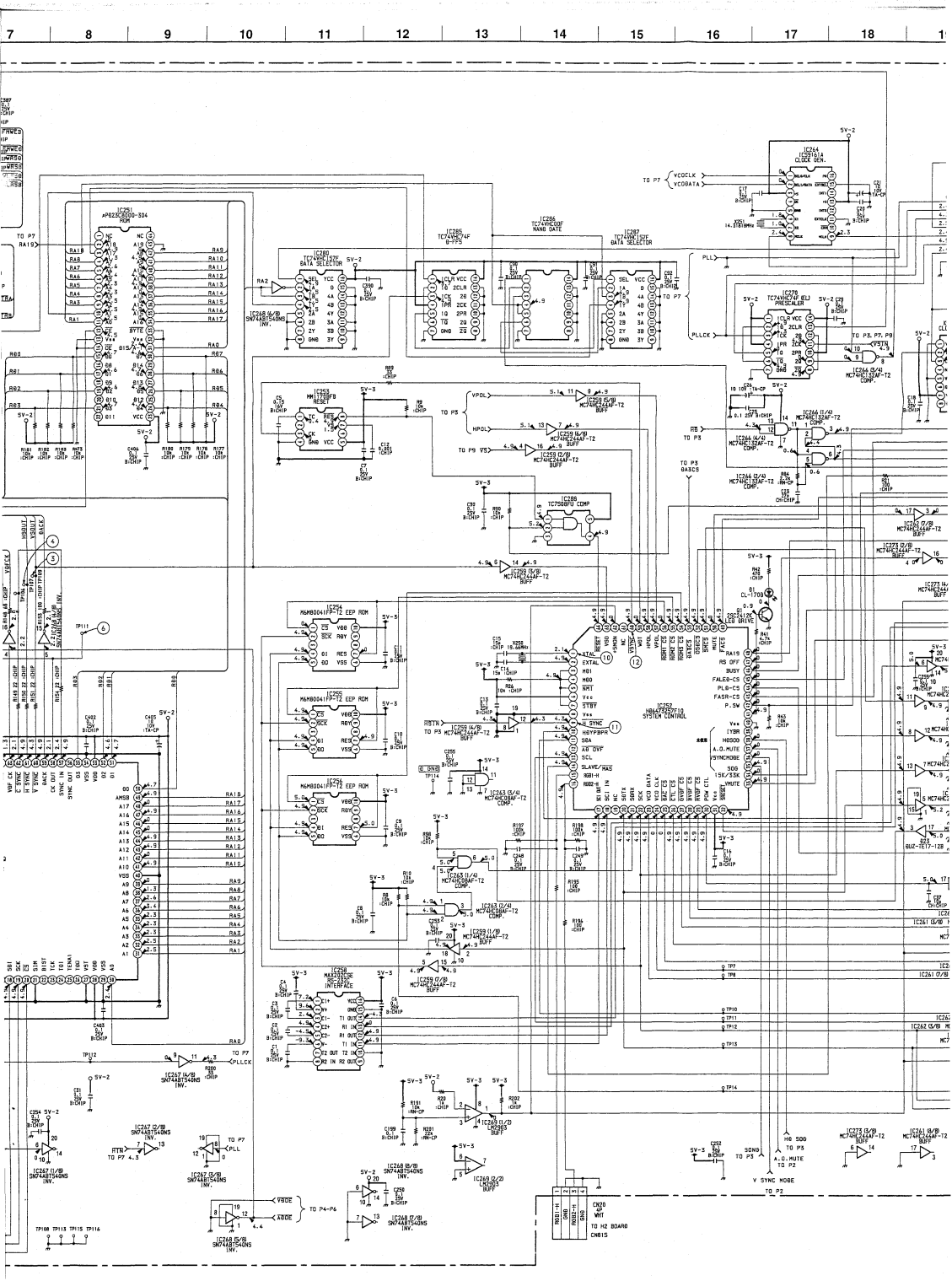
7
8
9
10
11
12
13
14
15
16
17
18
IC251
AP02SC8000-304
ROM
IC252
MB42S2527-10
SYSTEM CONTROL
IC253
M24C04-FP-T2
EEP ROM
IC254
M24C04-FP-T2
EEP ROM
IC255
M24C04-FP-T2
EEP ROM
IC256
M24C04-FP-T2
EEP ROM
IC257
MAX232CSE
INTERFACE
IC258
TC9288FU COMP
IC259
MC74FC244AF-T2
BUFF
IC260
TC74VHC157F
DATA SELECTOR
IC261
MC74FC244AF-T2
BUFF
IC262
MM1256AFB
RESET
IC263
MC74FC08AF-T2
COMP.
IC264
MC74FC157AF-T2
COMP.
IC265
TC74VHC74F
D-FFS
IC266
TC74VHC00F
NAND GATE
IC267
TC74VHC157F
DATA SELECTOR
IC268
SN74ABT540NS
INV.
IC269
LA7933
BUFF
IC270
TC74VHC74F (EL)
PRESCALER
IC271
CL-1709
IC272
MC74FC244AF-T2
BUFF
IC273
MC74FC244AF-T2
BUFF
IC274
MC74FC244AF-T2
BUFF
IC275
MC74FC244AF-T2
BUFF
IC276
MC74FC244AF-T2
BUFF
IC277
MC74FC244AF-T2
BUFF
IC278
MC74FC244AF-T2
BUFF
IC279
MC74FC244AF-T2
BUFF
IC280
MC74FC244AF-T2
BUFF
IC281
MC74FC244AF-T2
BUFF
IC282
MC74FC244AF-T2
BUFF
IC283
MC74FC244AF-T2
BUFF
IC284
MC74FC244AF-T2
BUFF

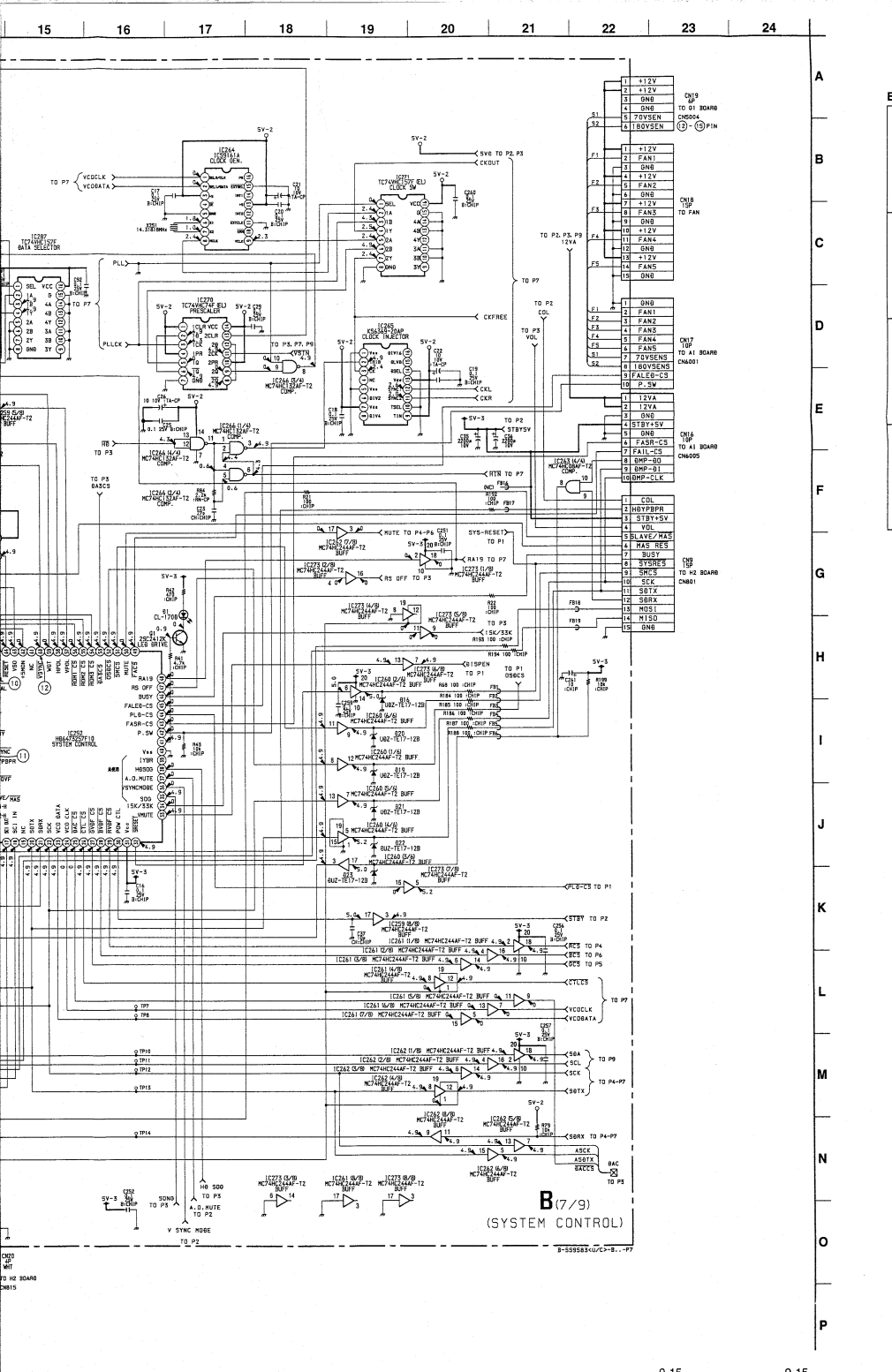
B (7/9)
(SYSTEM CONTROL)
B-5595B3<U/C>-B..-P7
B (7/9) BOARD
4.8 Vp-p (V)
5.0 Vp-p (H)
5.0 Vp-p
S: 74.5nsec
2.6 Vp-p (19.66MH
TO P7
TO P3
TO P2
TO P1
TO P4
TO P5
TO P6
TO P8
TO P9
TO P4-P7
TO A1 BOARD
TO H2 BOARD
TO FAN
TO 01 BOARD
TO P3, P7, P9
TO P3, P9
TO P4-P6
TO P4, P7
TO P2, P3
TO P3, P7
TO P4, P5
TO P5, P7
TO P5, P6
TO P5, P7
TO P4, P6
TO P1, P7
TO P1, P2
TO P1, P3
TO P1, P4
TO P1, P5
TO P1, P6
TO P1, P7
TO P2, P3
TO P2, P7
TO P3, P5
TO P3, P6
TO P3, P7
TO P4, P7
TO P5, P7
TO P6, P7
TO P7, P8
TO P7, P9
TO P8, P9
TO P9, P10
TO P9, P11
TO P9, P12
TO P9, P13
TO P9, P14
TO P10, P11
TO P10, P12
TO P10, P13
TO P10, P14
TO P11, P12
TO P11, P13
TO P11, P14
TO P12, P13
TO P12, P14
TO P13, P14
TO P14, P15
TO P15, P16
TO P16, P17
TO P17, P18
TO P18, P19
TO P19, P20
TO P20, P21
TO P21, P22
TO P22, P23
TO P23, P24
TO P24, P25
TO P25, P26
TO P26, P27
TO P27, P28
TO P28, P29
TO P29, P30
TO P30, P31
TO P31, P32
TO P32, P33
TO P33, P34
TO P34, P35
TO P35, P36
TO P36, P37
TO P37, P38
TO P38, P39
TO P39, P40
TO P40, P41
TO P41, P42
TO P42, P43
TO P43, P44
TO P44, P45
TO P45, P46
TO P46, P47
TO P47, P48
TO P48, P49
TO P49, P50
TO P50, P51
TO P51, P52
TO P52, P53
TO P53, P54
TO P54, P55
TO P55, P56
TO P56, P57
TO P57, P58
TO P58, P59
TO P59, P60
TO P60, P61
TO P61, P62
TO P62, P63
TO P63, P64
TO P64, P65
TO P65, P66
TO P66, P67
TO P67, P68
TO P68, P69
TO P69, P70
TO P70, P71
TO P71, P72
TO P72, P73
TO P73, P74
TO P74, P75
TO P75, P76
TO P76, P77
TO P77, P78
TO P78, P79
TO P79, P80
TO P80, P81
TO P81, P82
TO P82, P83
TO P83, P84
TO P84, P85
TO P85, P86
TO P86, P87
TO P87, P88
TO P88, P89
TO P89, P90
TO P90, P91
TO P91, P92
TO P92, P93
TO P93, P94
TO P94, P95
TO P95, P96
TO P96, P97
TO P97, P98
TO P98, P99
TO P99, P100
TO P100, P101
TO P101, P102
TO P102, P103
TO P103, P104
TO P104, P105
TO P105, P106
TO P106, P107
TO P107, P108
TO P108, P109
TO P109, P110
TO P110, P111
TO P111, P112
TO P112, P113
TO P113, P114
TO P114, P115
TO P115, P116
TO P116, P117
TO P117, P118
TO P118, P119
TO P119, P120
TO P120, P121
TO P121, P122
TO P122, P123
TO P123, P124
TO P124, P125
TO P125, P126
TO P126, P127
TO P127, P128
TO P128, P129
TO P129, P130
TO P130, P131
TO P131, P132
TO P132, P133
TO P133, P134
TO P134, P135
TO P135, P136
TO P136, P137
TO P137, P138
TO P138, P139
TO P139, P140
TO P140, P141
TO P141, P142
TO P142, P143
TO P143, P144
TO P144, P145
TO P145, P146
TO P146, P147
TO P147, P148
TO P148, P149
TO P149, P150
TO P150, P151
TO P151, P152
TO P152, P153
TO P153, P154
TO P154, P155
TO P155, P156
TO P156, P157
TO P157, P158
TO P158, P159
TO P159, P160
TO P160, P161
TO P161, P162
TO P162, P163
TO P163, P164
TO P164, P165
TO P165, P166
TO P166, P167
TO P167, P168
TO P168, P169
TO P169, P170
TO P170, P171
TO P171, P172
TO P172, P173
TO P173, P174
TO P174, P175
TO P175, P176
TO P176, P177
TO P177, P178
TO P178, P179
TO P179, P180
TO P180, P181
TO P181, P182
TO P182, P183
TO P183, P184
TO P184, P185
TO P185, P186
TO P186, P187
TO P187, P188
TO P188, P189
TO P189, P190
TO P190, P191
TO P191, P192
TO P192, P193
TO P193, P194
TO P194, P195
TO P195, P196
TO P196, P197
TO P197, P198
TO P198, P199
TO P199, P200
TO P200, P201
TO P201, P202
TO P202, P203
TO P203, P204
TO P204, P205
TO P205, P206
TO P206, P207
TO P207, P208
TO P208, P209
TO P209, P210
TO P210, P211
TO P211, P212
TO P212, P213
TO P213, P214
TO P214, P215
TO P215, P216
TO P216, P217
TO P217, P218
TO P218, P219
TO P219, P220
TO P220, P221
TO P221, P222
TO P222, P223
TO P223, P224
TO P224, P225
TO P225, P226
TO P226, P227
TO P227, P228
TO P228, P229
TO P229, P230
TO P230, P231
TO P231, P232
TO P232, P233
TO P233, P234
TO P234, P235
TO P235, P236
TO P236, P237
TO P237, P238
TO P238, P239
TO P239, P240
TO P240, P241
TO P241, P242
TO P242, P243
TO P243, P244
TO P244, P245
TO P245, P246
TO P246, P247
TO P247, P248
TO P248, P249
TO P249, P250
TO P250, P251
TO P251, P252
TO P252, P253
TO P253, P254
TO P254, P255
TO P255, P256
TO P256, P257
TO P257, P258
TO P258, P259
TO P259, P260
TO P260, P261
TO P261, P262
TO P262, P263
TO P263, P264
TO P264, P265
TO P265, P266
TO P266, P267
TO P267, P268
TO P268, P269
TO P269, P270
TO P270, P271
TO P271, P272
TO P272, P273
TO P273, P274
TO P274, P275
TO P275, P276
TO P276, P277
TO P277, P278
TO P278, P279
TO P279, P280
TO P280, P281
TO P281, P282
TO P282, P283
TO P283, P284
TO P284, P285
TO P285, P286
TO P286, P287
TO P287, P288
TO P288, P289
TO P289, P290
TO P290, P291
TO P291, P292
TO P292, P293
TO P293, P294
TO P294, P295
TO P295, P296
TO P296, P297
TO P297, P298
TO P298, P299
TO P299, P300
TO P300, P301
TO P301, P302
TO P302, P303
TO P303, P304
TO P304, P305
TO P305, P306
TO P306, P307
TO P307, P308
TO P308, P309
TO P309, P310
TO P310, P311
TO P311, P312
TO P312, P313
TO P313, P314
TO P314, P315
TO P315, P316
TO P316, P317
TO P317, P318
TO P318, P319
TO P319, P320
TO P320, P321
TO P321, P322
TO P322, P323
TO P323, P324
TO P324, P325
TO P325, P326
TO P326, P327
TO P327, P328
TO P328, P329
TO P329, P330
TO P330, P331
TO P331, P332
TO P332, P333
TO P333, P334
TO P334, P335
TO P335, P336
TO P336, P337
TO P337, P338
TO P338, P339
TO P339, P340
TO P340, P341
TO P341, P342
TO P342, P343
TO P343, P344
TO P344, P345
TO P345, P346
TO P346, P347
TO P347, P348
TO P348, P349
TO P349, P350
TO P350, P351
TO P351, P352
TO P352, P353
TO P353, P354
TO P354, P355
TO P355, P356
TO P356, P357
TO P357, P358
TO P358, P359
TO P359, P360
TO P360, P361
TO P361, P362
TO P362, P363
TO P363, P364
TO P364, P365
TO P365, P366
TO P366, P367
TO P367, P368
TO P368, P369
TO P369, P370
TO P370, P371
TO P371, P372
TO P372, P373
TO P373, P374
TO P374, P375
TO P375, P376
TO P376, P377
TO P377, P378
TO P378, P379
TO P379, P380
TO P380, P381
TO P381, P382
TO P382, P383
TO P383, P384
TO P384, P385
TO P385, P386
TO P386, P387
TO P387, P388
TO P388, P389
TO P389, P390
TO P390, P391
TO P391, P392
TO P392, P393
TO P393, P394
TO P394, P395
TO P395, P396
TO P396, P397
TO P397, P398
TO P398, P399
TO P399, P400
TO P400, P401
TO P401, P402
TO P402, P403
TO P403, P404
TO P404, P405
TO P405, P406
TO P406, P407
TO P407, P408
TO P408, P409
TO P409, P410
TO P410, P411
TO P411, P412
TO P412, P413
TO P413, P414
TO P414, P415
TO P415, P416
TO P416, P417
TO P417, P418
TO P418, P419
TO P419, P420
TO P420, P421
TO P421, P422
TO P422, P423
TO P423, P424
TO P424, P425
TO P425, P426
TO P426, P427
TO P427, P428
TO P428, P429
TO P429, P430
TO P430, P431
TO P431, P432
TO P432, P433
TO P433, P434
TO P434, P435
TO P435, P436
TO P436, P437
TO P437, P438
TO P438, P439
TO P439, P440
TO P440, P441
TO P441, P442
TO P442, P443
TO P443, P444
TO P444, P445
TO P445, P446
TO P446, P447
TO P447, P448
TO P448, P449
TO P449, P450
TO P450, P451
TO P451, P452
TO P452, P453
TO P453, P454
TO P454, P455
TO P455, P456
TO P456, P457
TO P457, P458
TO P458, P459
TO P459, P460
TO P460, P461
TO P461, P462
TO P462, P463
TO P463, P464
TO P464, P465
TO P465, P466
TO P466, P467
TO P467, P468
TO P468, P469
TO P469, P470
TO P470, P471
TO P471, P472
TO P472, P473
TO P473, P474
TO P474, P475
TO P475, P476
TO P476, P477
TO P477, P478
TO P478, P479
TO P479, P480
TO P480, P481
TO P481, P482
TO P482, P483
TO P483, P484
TO P484, P485
TO P485, P486
TO P486, P487
TO P487, P488
TO P488, P489
TO P489, P490
TO P490, P491
TO P491, P492
TO P492, P493
TO P493, P494
TO P494, P495
TO P495, P496
TO P496, P497
TO P497, P498
TO P498, P499
TO P499, P500
TO P500, P501
TO P501, P502
TO P502, P503
TO P503, P504
TO P504, P505
TO P505, P506
TO P506, P507
TO P507, P508
TO P508, P509
TO P509, P510
TO P510, P511
TO P511, P512
TO P512, P513
TO P513, P514
TO P514, P515
TO P515, P516
TO P516, P517
TO P517, P518
TO P518, P519
TO P519, P520
TO P520, P521
TO P521, P522
TO P522, P523
TO P523, P524
TO P524, P525
TO P525, P526
TO P526, P527
TO P527, P528
TO P528, P529
TO P529, P530
TO P530, P531
TO P531, P532
TO P532, P533
TO P533, P534
TO P534, P535
TO P535, P536
TO P536, P537
TO P537, P538
TO P538, P539
TO P539, P540
TO P540, P541
TO P541, P542
TO P542, P543
TO P543, P544
TO P544, P545
TO P545, P546
TO P546, P547
TO P547, P548
TO P548, P549
TO P549, P550
TO P550, P551
TO P551, P552
TO P552, P553
TO P553, P554
TO P554, P555
TO P555, P556
TO P556, P557
TO P557, P558
TO P558, P559
TO P559, P560
TO P560, P561
TO P561, P562
TO P562, P563
TO P563, P564
TO P564, P565
TO P565, P566
TO P566, P567
TO P567, P568
TO P568, P569
TO P569, P570
TO P570, P571
TO P571, P572
TO P572, P573
TO P573, P574
TO P574, P575
TO P575, P576
TO P576, P577
TO P577, P578
TO P578, P579
TO P579, P580
TO P580, P581
TO P581, P582
TO P582, P583
TO P583, P584
TO P584, P585
TO P585, P586
TO P586, P587
TO P587, P588
TO P588, P589
TO P589, P590
TO P590, P591
TO P591, P592
TO P592, P593
TO P593, P594
TO P594, P595
TO P595, P596
TO P596, P597
TO P597, P598
TO P598, P599
TO P599, P600
TO P600, P601
TO P601, P602
TO P602, P603
TO P603, P604
TO P604, P605
TO P605, P606
TO P606, P607
TO P607, P608
TO P608, P609
TO P609, P610
TO P610, P611
TO P611, P612
TO P612, P613
TO P613, P614
TO P614, P615
TO P615, P616
TO P616, P617
TO P617, P618
TO P618, P619
TO P619, P620
TO P620, P621
TO P621, P622
TO P622, P623
TO P623, P624
TO P624, P625
TO P625, P626
TO P626, P627
TO P627, P628
TO P628, P629
TO P629, P630
TO P630, P631
TO P631, P632
TO P632, P633
TO P633, P634
TO P634, P635
TO P635, P636
TO P636, P637
TO P637, P638
TO P638, P639
TO P639, P640
TO P640, P641
TO P641, P642
TO P642, P643
TO P643, P644
TO P644, P645
TO P645, P646
TO P646, P647
TO P647, P648
TO P648, P649
TO P649, P650
TO P650, P651
TO P651, P652
TO P652, P653
TO P653, P654
TO P654, P655
TO P655, P656
TO P656, P657
TO P657, P658
TO P658, P659
TO P659, P660
TO P660, P661
TO P661, P662
TO P662, P663
TO P663, P664
TO P664, P665
TO P665, P666
TO P666, P667
TO P667, P668
TO P668, P669
TO P669, P670
TO P670, P671
TO P671, P672
TO P672, P673
TO P673, P674
TO P674, P675
TO P675, P676
TO P676, P677
TO P677, P678
TO P678, P679
TO P679, P680
TO P680, P681
TO P681, P682
TO P682, P683
TO P683, P684
TO P684, P685
TO P685, P686
TO P686, P687
TO P687, P688
TO P688, P689
TO P689, P690
TO P690, P691
TO P691, P692
TO P692, P693
TO P693, P694
TO P694, P695
TO P695, P696
TO P696, P697
TO P697, P698
TO P698, P699
TO P699, P700
TO P700, P701
TO P701, P702
TO P702, P703
TO P703, P704
TO P704, P705
TO P705, P706
TO P706, P707
TO P707, P708
TO P708, P709
TO P709, P710
TO P710, P711
TO P711, P712
TO P712, P713
TO P713, P714
TO P714, P715
TO P715, P716
TO P716, P717
TO P717, P718
TO P718, P719
TO P719, P720
TO P720, P721
TO P721, P722
TO P722, P723
TO P723, P724
TO P724, P725
TO P725, P726
TO P726, P727
TO P727, P728
TO P728, P729
TO P729, P730
TO P730, P731
TO P731, P732
TO P732, P733
TO P733, P734
TO P734, P735
TO P735, P736
TO P736, P737
TO P737, P738
TO P738, P739
TO P739, P740
TO P740, P741
TO P741, P742
TO P742, P743
TO P743, P744
TO P744, P745
TO P745, P746
TO P746, P747
TO P747, P748
TO P748, P749
TO P749, P750
TO P750, P751
TO P751, P752
TO P752, P753
TO P753, P754
TO P754, P755
TO P755, P756
TO P756, P757
TO P757, P758
TO P758, P759
TO P759, P760
TO P760, P761
TO P761, P762
TO P762, P763
TO P763, P764
TO P764, P765
TO P765, P766
TO P766, P767
TO P767, P768
TO P768, P769
TO P769, P770
TO P770, P771
TO P771, P772
TO P772, P773
TO P773, P774
TO P774, P775
TO P775, P776
TO P776, P777
TO P777, P778
TO P778, P779
TO P779, P780
TO P780, P781
TO P781, P782
TO P782, P783
TO P783, P784
TO P784, P785
TO P785, P786
TO P786, P787
TO P787, P788
TO P788, P789
TO P789, P790
TO P790, P791
TO P791, P792
TO P792, P793
TO P793, P794
TO P794, P795
TO P795, P796
TO P796, P797
TO P797, P798
TO P798, P799
TO P799, P800
TO P800, P801
TO P801, P802
TO P802, P803
TO P803, P804
TO P804, P805
TO P805, P806
TO P806, P807
TO P807, P808
TO P808, P809
TO P809, P810
TO P810, P811
TO P811, P812
TO P812, P813
TO P813, P814
TO P814, P815
TO P815, P816
TO P816, P817
TO P817, P818
TO P818, P819
TO P819, P820
TO P820, P821
TO P821, P822
TO P822, P823
TO P823, P824
TO P824, P825
TO P825, P826
TO P826, P827
TO P827, P828
TO P828, P829
TO P829, P830
TO P830, P831
TO P831, P832
TO P832, P833
TO P833, P834
TO P834, P835
TO P835, P836
TO P836, P837
TO P837, P838
TO P838, P839
TO P839, P840
TO P840, P841
TO P841, P842
TO P842, P843
TO P843, P844
TO P844, P845
TO P845, P846
TO P846, P847
TO P847, P848
TO P848, P849
TO P849, P850
TO P850, P851
TO P851, P852
TO P852, P853
TO P853, P854
TO P854, P855
TO P855, P856
TO P856, P857
TO P857, P858
TO P858, P859
TO P859, P860
TO P860, P861
TO P861, P862
TO P862, P863
TO P863, P864
TO P864, P865
TO P865, P866
TO P866, P867
TO P867, P868
TO P868, P869
TO P869, P870
TO P870, P871
TO P871, P872
TO P872, P873
TO P873, P874
TO P874, P875
TO P875, P876
TO P876, P877
TO P877, P878
TO P878, P879
TO P879, P880
TO P880, P881
TO P881, P882
TO P882, P883
TO P883, P884
TO P884, P885
TO P885, P886
TO P886, P887
TO P887, P888
TO P888, P889
TO P889, P890
TO P890, P891
TO P891, P892
TO P892, P893
TO P893, P894
TO P894, P895
TO P895, P896
TO P896, P897
TO P897, P898
TO P898, P899
TO P899, P900
TO P900, P901
TO P901, P902
TO P902, P903
TO P903, P904
TO P904, P905
TO P905, P906
TO P906, P907
TO P907, P908
TO P908, P909
TO P909, P910
TO P910, P911
TO P911, P912
TO P912, P913
TO P913, P914
TO P914, P915
TO P915, P916
TO P916, P917
TO P917, P918
TO P918, P919
TO P919, P920
TO P920, P921
TO P921, P922
TO P922, P923
TO P923, P924
TO P924, P925
TO P925, P926
TO P926, P927
TO P927, P928
TO P928, P929
TO P929, P930
TO P930, P931
TO P931, P932
TO P932, P933
TO P933, P934
TO P934, P935
TO P935, P936
TO P936, P937
TO P937, P938
TO P938, P939
TO P939, P940
TO P940, P941
TO P941, P942
TO P942, P943
TO P943, P944
TO P944, P945
TO P945, P946
TO P946, P947
TO P947, P948
TO P948, P949
TO P949, P950
TO P950, P951
TO P951, P952
TO P952, P953
TO P953, P954
TO P954, P955
TO P955, P956
TO P956, P957
TO P957, P958
TO P958, P959
TO P959, P960
TO P960, P961
TO P961, P962
TO P962, P963
TO P963, P964
TO P964, P965
TO P965, P966
TO P966, P967
TO P967, P968
TO P968, P969
TO P969, P970
TO P970, P971
TO P971, P972
TO P972, P973
TO P973, P974
TO P974, P975
TO P975, P976
TO P976, P977
TO P977, P978
TO P978, P979
TO P979, P980
TO P980, P981
TO P981, P982
TO P982, P983
TO P983, P984
TO P984, P985
TO P985, P986
TO P986, P987
TO P987, P988
TO P988, P989
TO P989, P990
TO P990, P991
TO P991, P992
TO P992, P993
TO P993, P994
TO P994, P995
TO P995, P996
TO P996, P997
TO P997, P998
TO P998, P999
TO P999, P1000

9-15

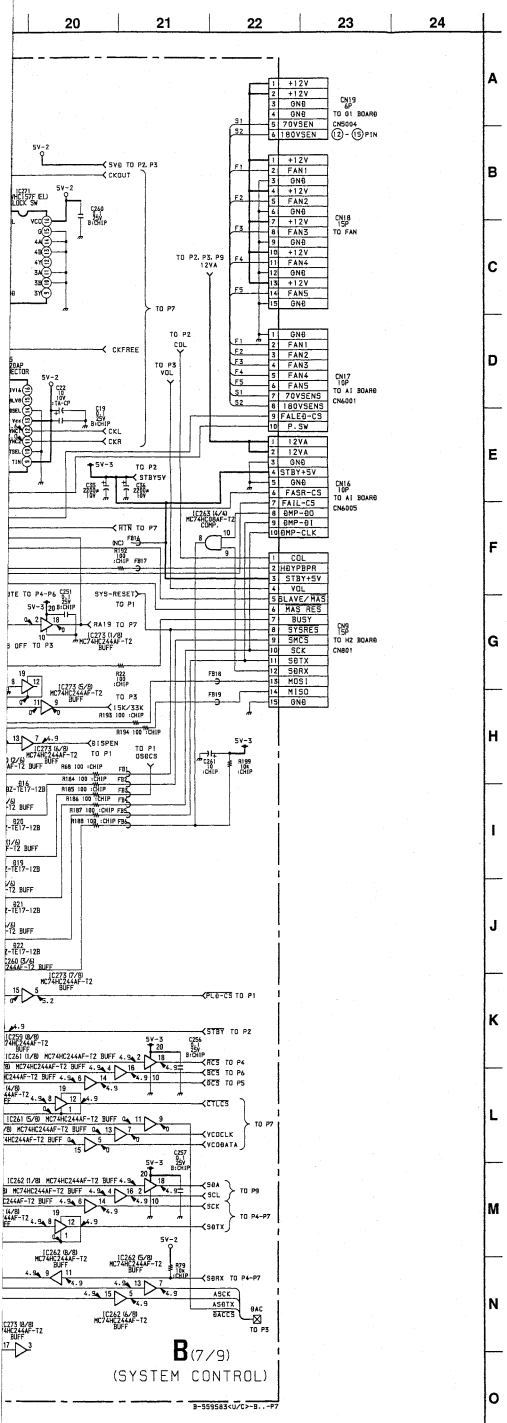

B (7/9) BOARD

① 4.8 Vp-p (V)	② 4.8 Vp-p (H)	③ 4.9 Vp-p (V)
④ 5.0 Vp-p (H)	⑤ 5.0 Vp-p (H)	⑥ S 2.5 Vp-p S: 33.5nsec
⑦ S 5.0 Vp-p S: 74.5nsec	⑧ S 5.0 Vp-p S: 74.5nsec	⑨ S 5.0 Vp-p S: 74.5nsec
⑩ 2.6 Vp-p (19.66MHz)	⑪ 4.9 Vp-p (H)	⑫ 5.0 Vp-p (V)

9-15

B (8/9) BOARD

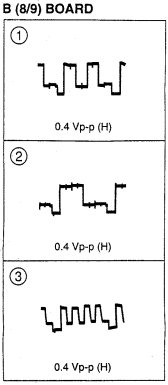
①
0.4 Vp-p (H)
②
0.4 Vp-p (H)
③
0.4 Vp-p (H)

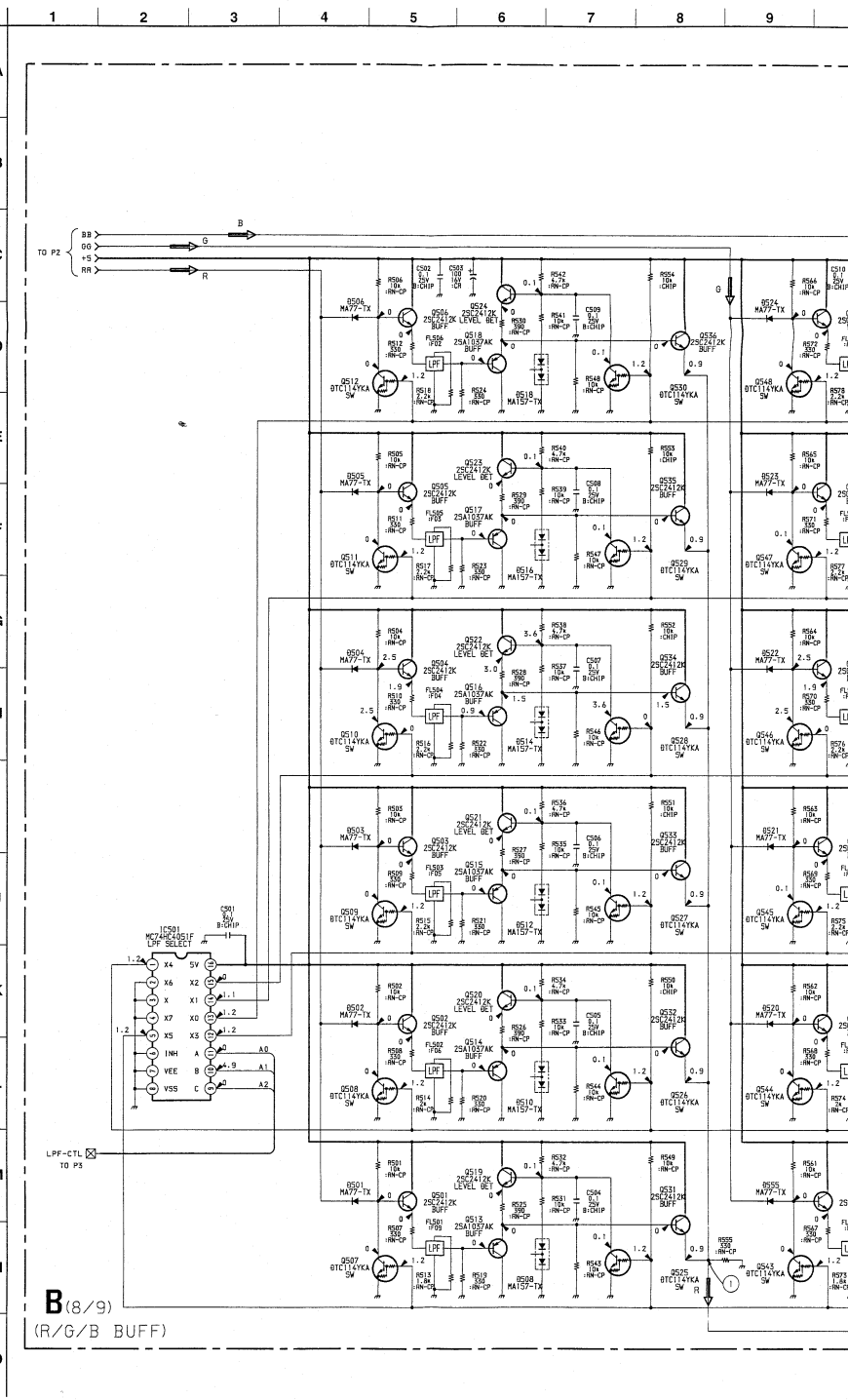
1
2
3
4
5
6
7
8
9
A
B
C
D
E
F
G
H
I
J
K
L
M
N
O
TO P2
BB
GG
+S
RR
B
G
R
IC501
MC74HC4051F
LPF SELECT
X4
X6
X
X7
X5
INH
VEE
VSS
5V
X2
X1
X0
X3
A
B
C
A0
A1
A2
LPF-CTL
TO P3
B(8/9)
(R/G/B BUFF)

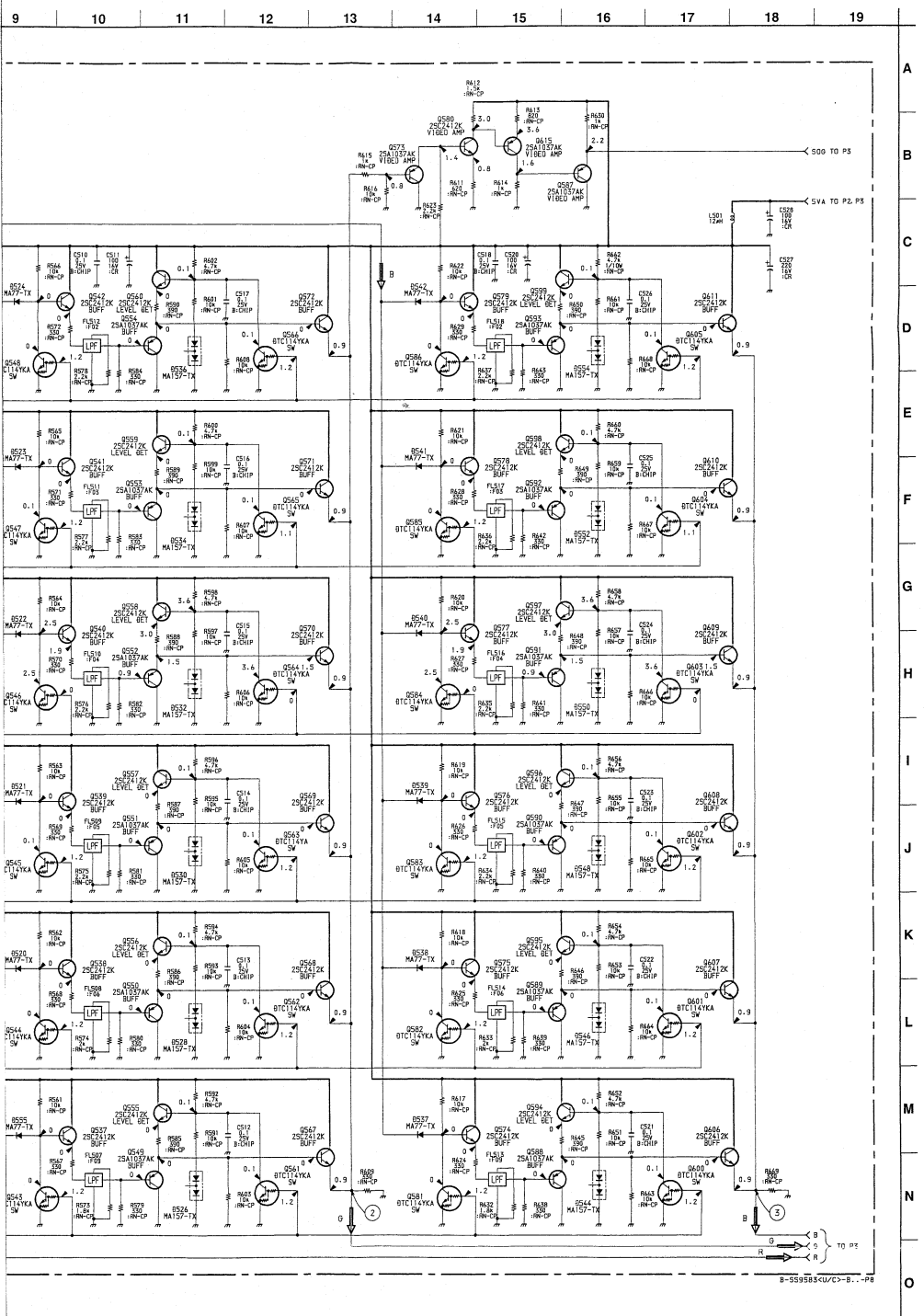
9
10
11
12
13
14
15
16
17
18
19
A
B
C
D
E
F
G
H
I
J
K
L
M
N
O
500 TO P3
5VA TO P2, P3
TO P3
B-SS9583<U/C>-B..-P8

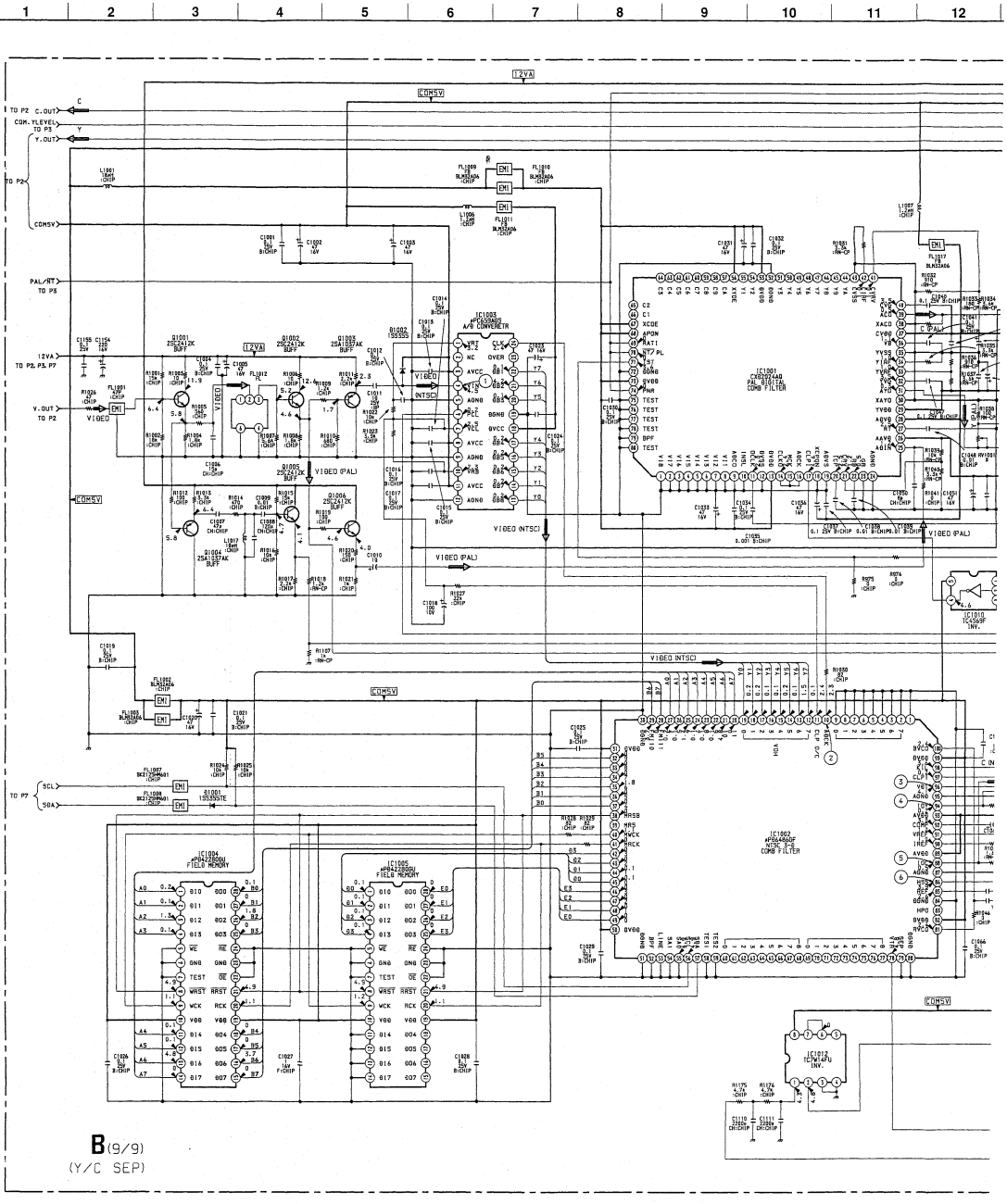
B (9/9)
(Y/C SEP)

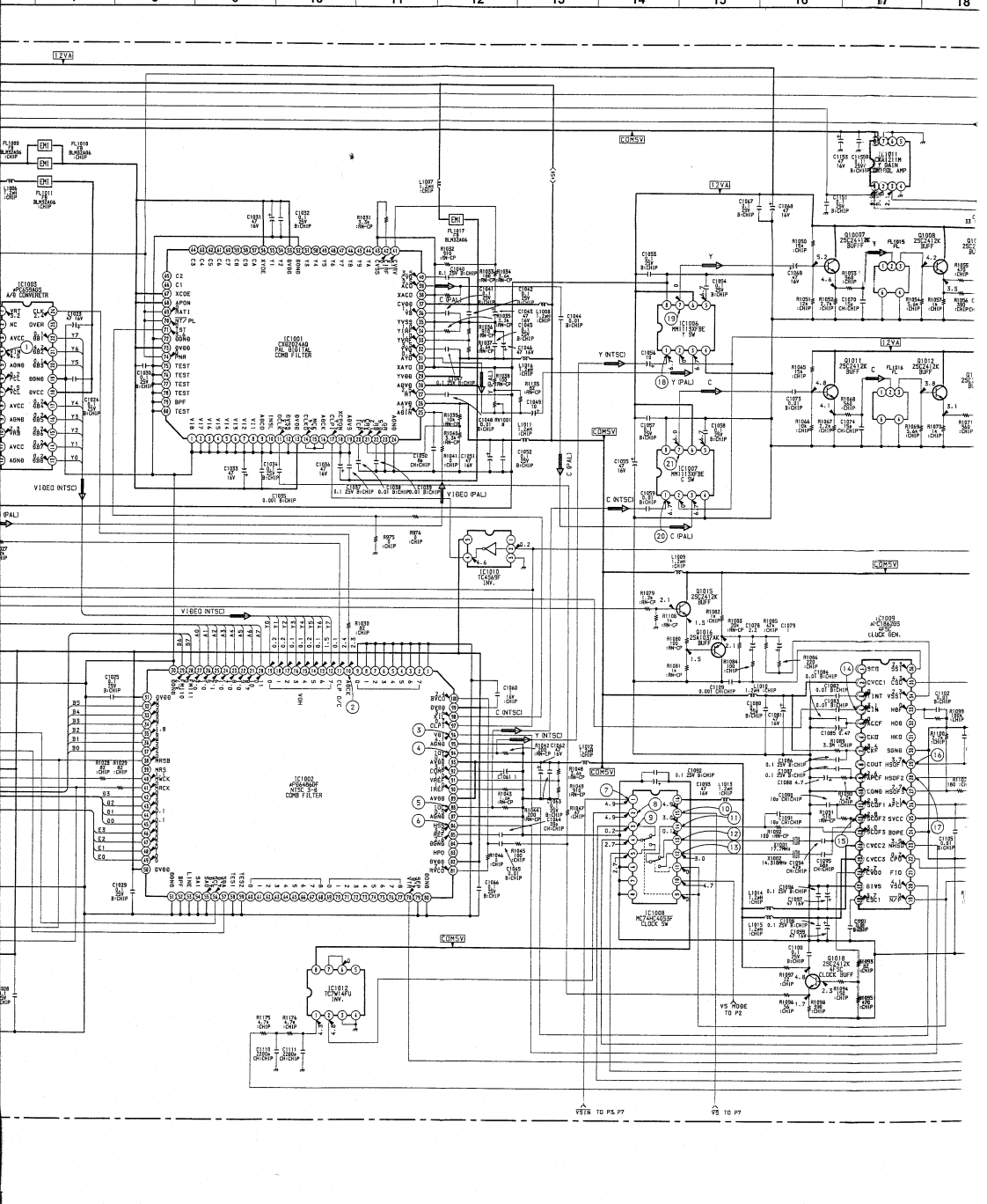
7
8
9
10
11
12
13
14
15
16
17
18
12VA
COM5V
IC1003
AP6459A05
A/D CONVERTER
IC1001
CX02C24A0
PAL DIGITAL
COMB FILTER
IC1006
MM1113XFBE
Y SW
IC1007
MM1113XFBE
C SW
IC1011
CXA1211M
Y GAIN
CONTROL AMP
Q1007
2SC2412K
BUFF
Q1008
2SC2412K
BUFF
Q1011
2SC2412K
BUFF
Q1012
2SC2412K
BUFF
Q1015
2SC2412K
BUFF
Q1016
2SA1037AK
BUFF
IC1009
AC1862G5
CLOCK GEN.
IC1002
AP6446DF
NTSC 2-
COMB FILTER
IC1008
MC74HC4053F
CLOCK SW
Q1018
2SC2412K
CLOCK BUFF
IC1012
TC7W14FU
INV.
IC1010
TC4569F
INV.
VIDEO (NTSC)
VIDEO (PAL)
C (PAL)
C (NTSC)
Y (NTSC)
Y (PAL)
VS MODE
TO P2
VSIN TO P3, P7
VS TO P7

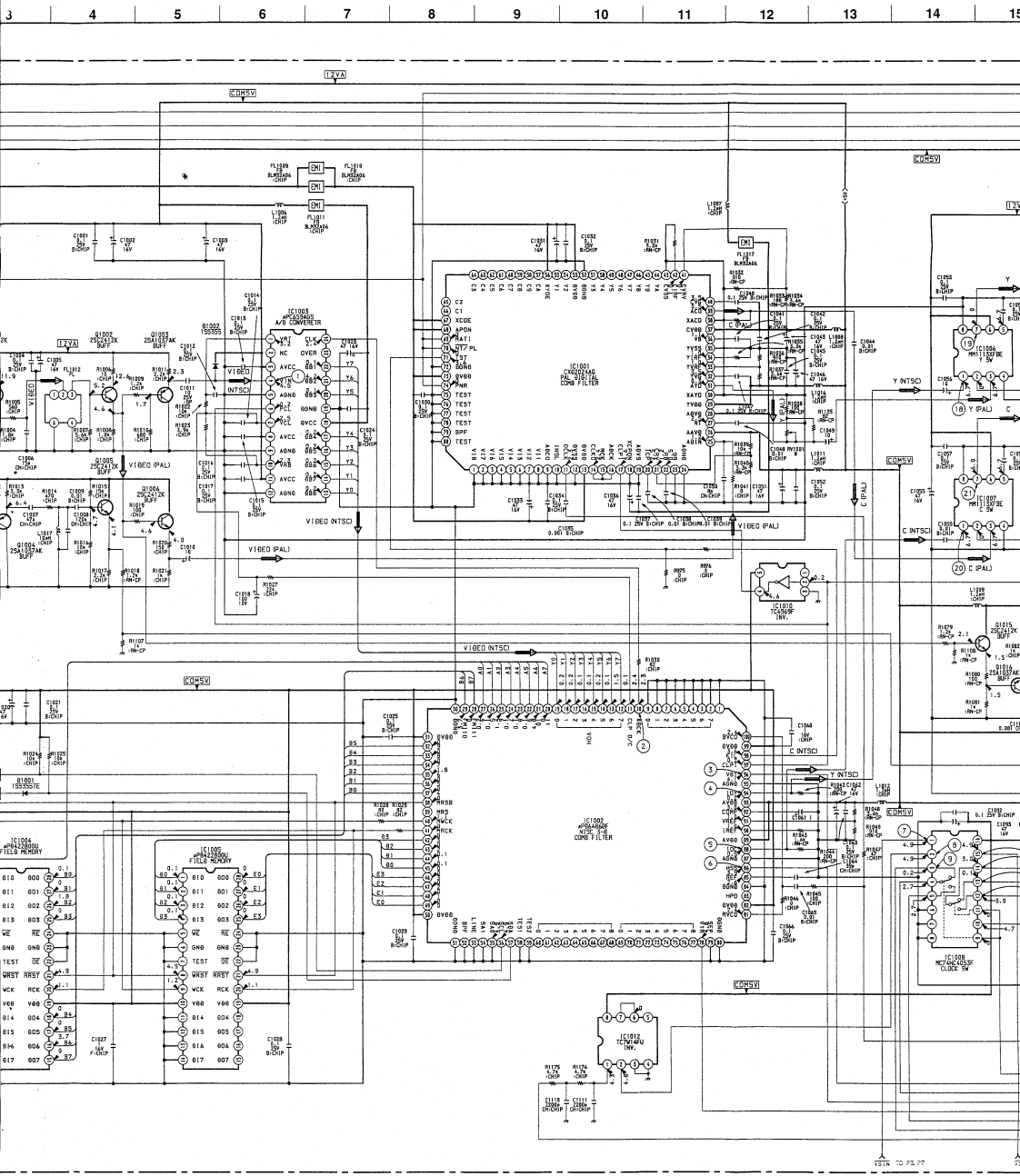

9-17

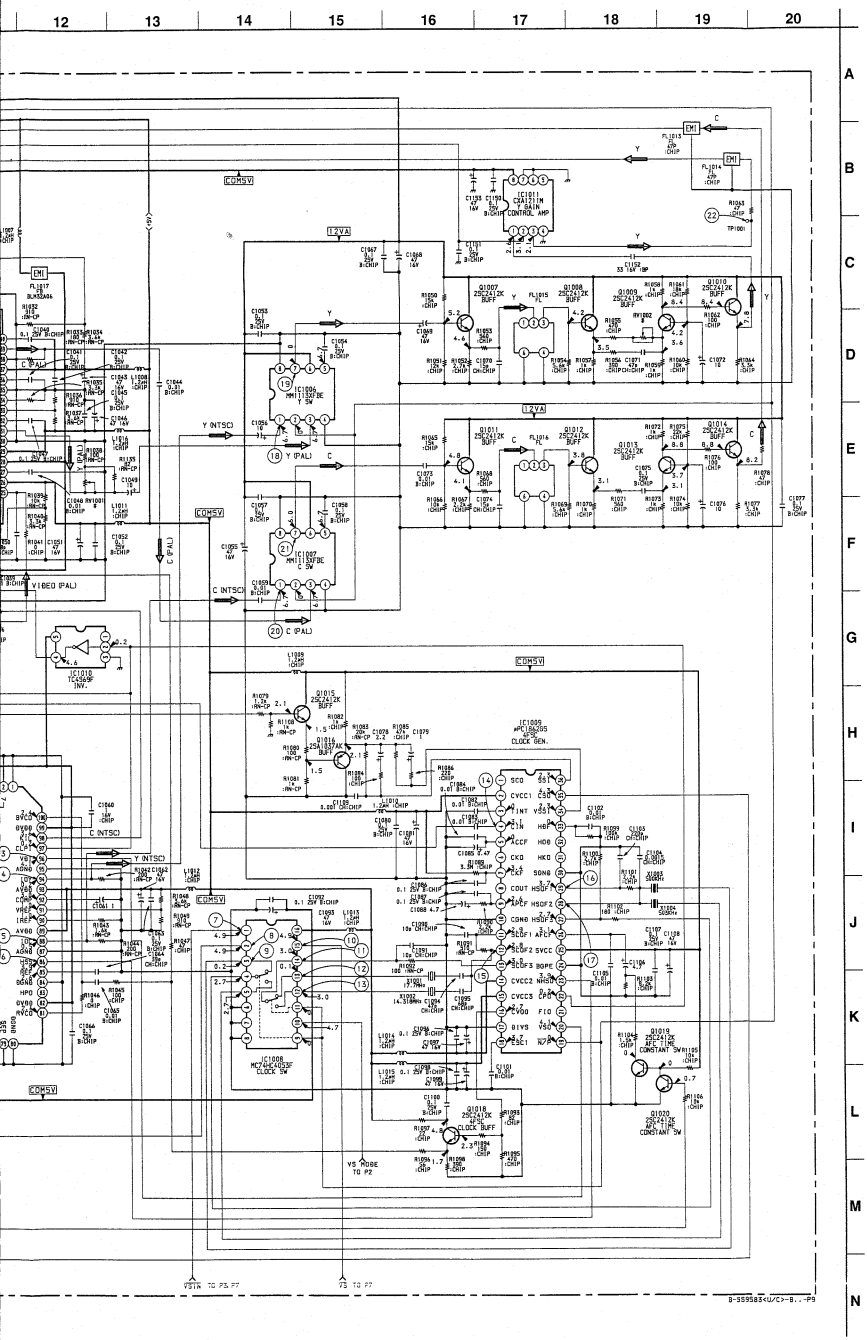

B (9/9) BOARD

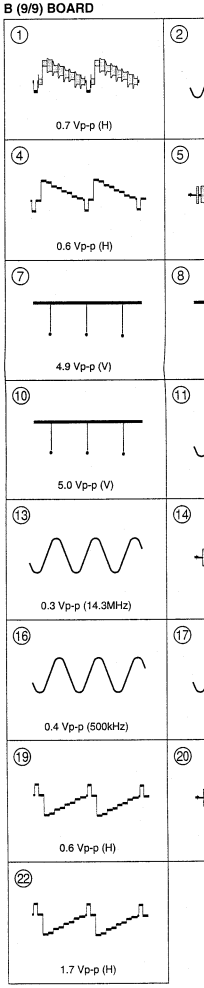

9-17

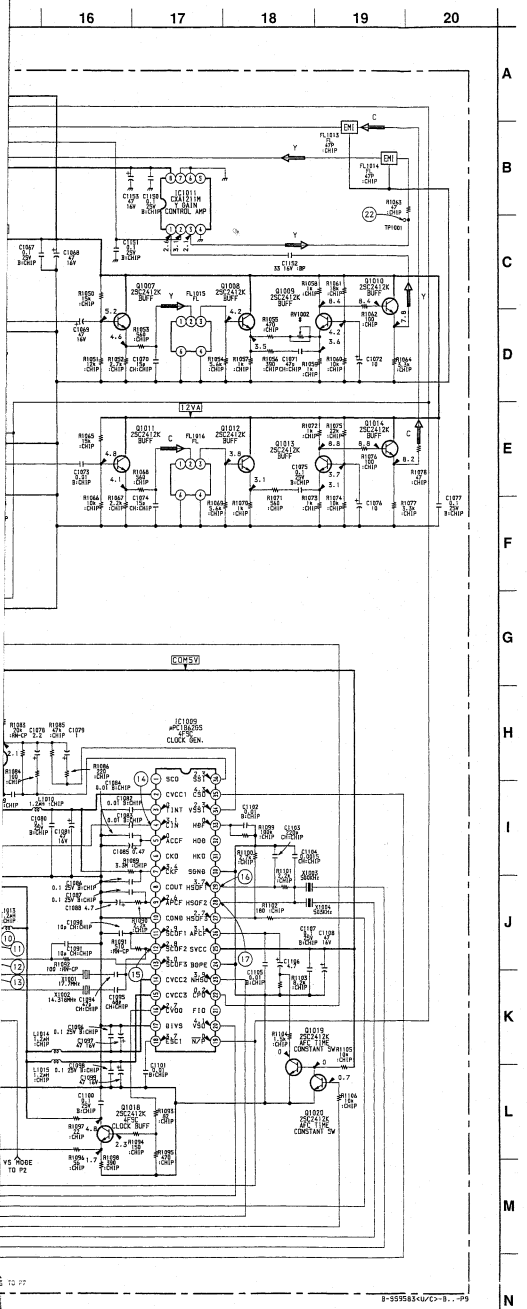

B (9/9) BOARD

① 0.7 Vp-p (H)	② S 4.8 Vp-p S: 69.7nsec	③ 4.3 Vp-p (V)
④ 0.6 Vp-p (H)	⑤ 0.4 Vp-p (H)	⑥ 4.2 Vp-p (V)
⑦ 4.9 Vp-p (V)	⑧ 5.0 Vp-p (V)	⑨ 0.7 Vp-p (15.7kHz)
⑩ 5.0 Vp-p (V)	⑪ S 0.4 Vp-p S: 71.6nsec	⑫ 0.1 Vp-p (17.7MHz)
⑬ 0.3 Vp-p (14.3MHz)	⑭ 0.5 Vp-p (H)	⑮ S 0.6 Vp-p S: 69.7nsec
⑯ 0.4 Vp-p (500kHz)	⑰ 0.7 Vp-p (503kHz)	⑱ 0.6 Vp-p (H)
⑲ 0.6 Vp-p (H)	⑳ 0.4 Vp-p (H)	㉑ 0.4 Vp-p (H)
㉒ 1.7 Vp-p (H)		

9-17

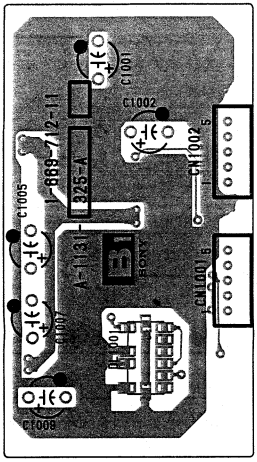

B1 – A SIDE –
SUFFIX: -11

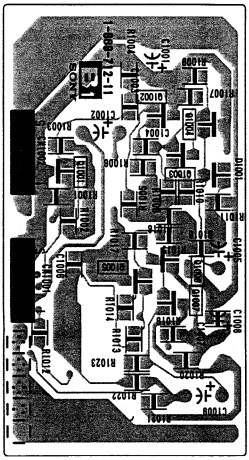

B1 – B SIDE –
SUFFIX: -11

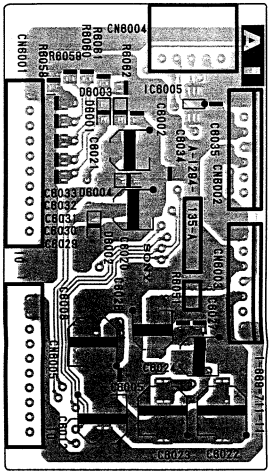

AI – A SIDE –
SUFFIX: -11

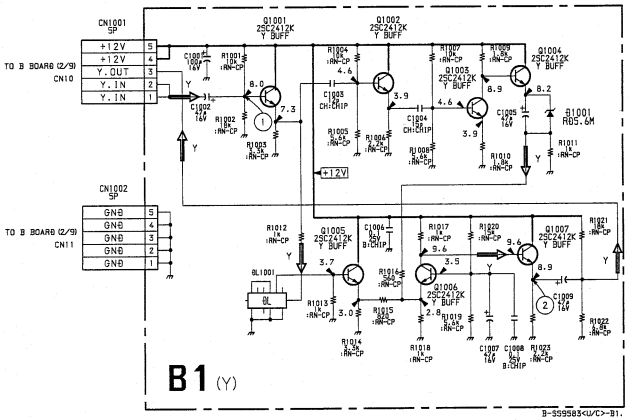

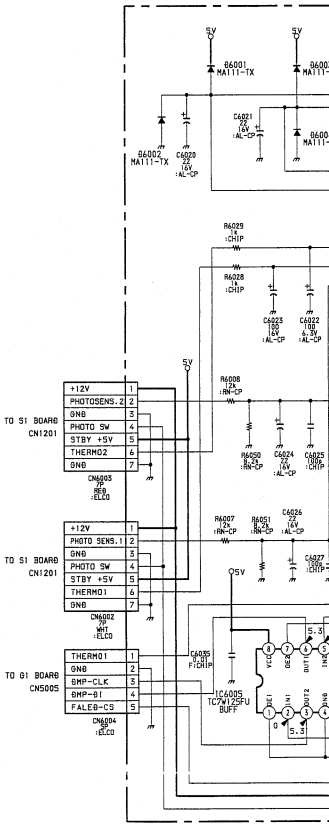

B1 BOARD

①	②
1.6 Vp-p (H)	1.0 Vp-p (H)

9-18

– A SIDE –
IX: -11

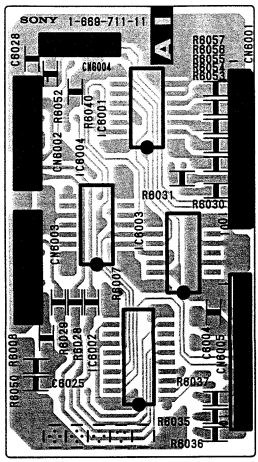

AI – B SIDE –
SUFFIX: -11

AI BOARD IC6004 MC74HC74AF

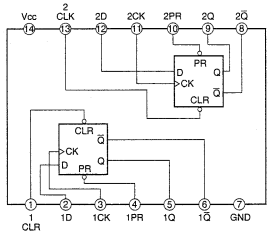

AI BOARD IC6005
TC7W125FU

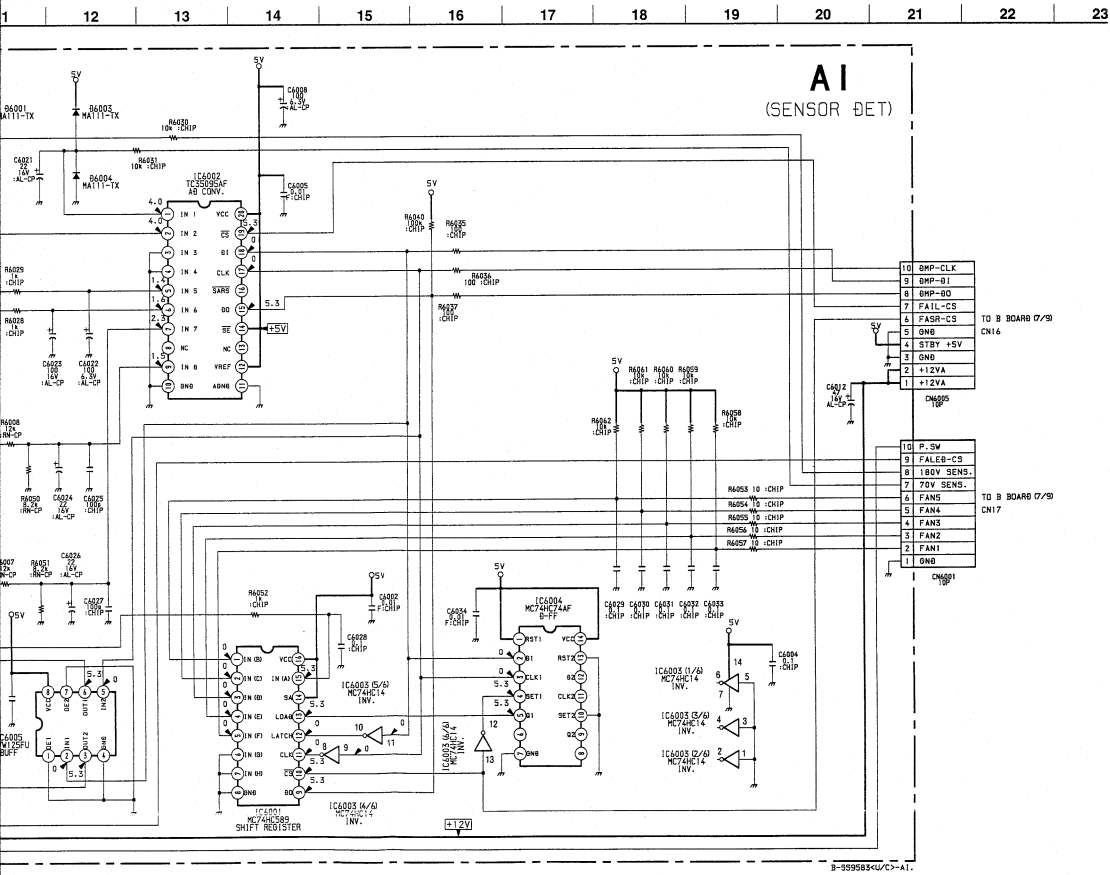

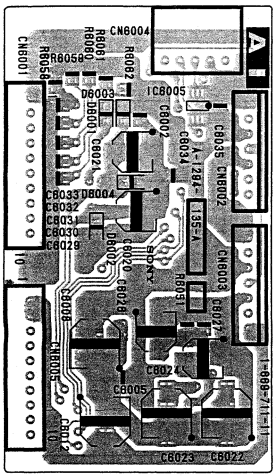
CN6004
A I
R6058
R6059
R6060
R6082
CN6001
IC8005
D8003
D8001
C8001
C8007
C8004
C8034
C8033
D8004
C8032
C8031
C8030
C8029
C8028
C8027
C8026
C8024
C8023
C8022
C8021
C8020
C8019
C8018
C8017
C8016
C8015
C8014
C8013
C8012
C8011
C8010
C8009
C8008
C8006
C8005
C8003
C8002
C8001
CN8002
CN8003
R8001
R8002
R8003
R8004
R8005
R8006
R8007
R8008
R8009
R8010
R8011
R8012
R8013
R8014
R8015
R8016
R8017
R8018
R8019
R8020
R8021
R8022
R8023
R8024
R8025
R8026
R8027
R8028
R8029
R8030
R8031
R8032
R8033
R8034
R8035
R8036
R8037
R8038
R8039
R8040

AI BOARD IC6004 MC74HC74AF

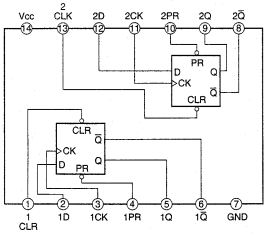

AI BOARD IC6005
TC7W125FU

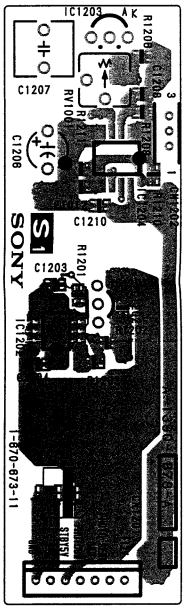

S1 – A SIDE –
SUFFIX: -11

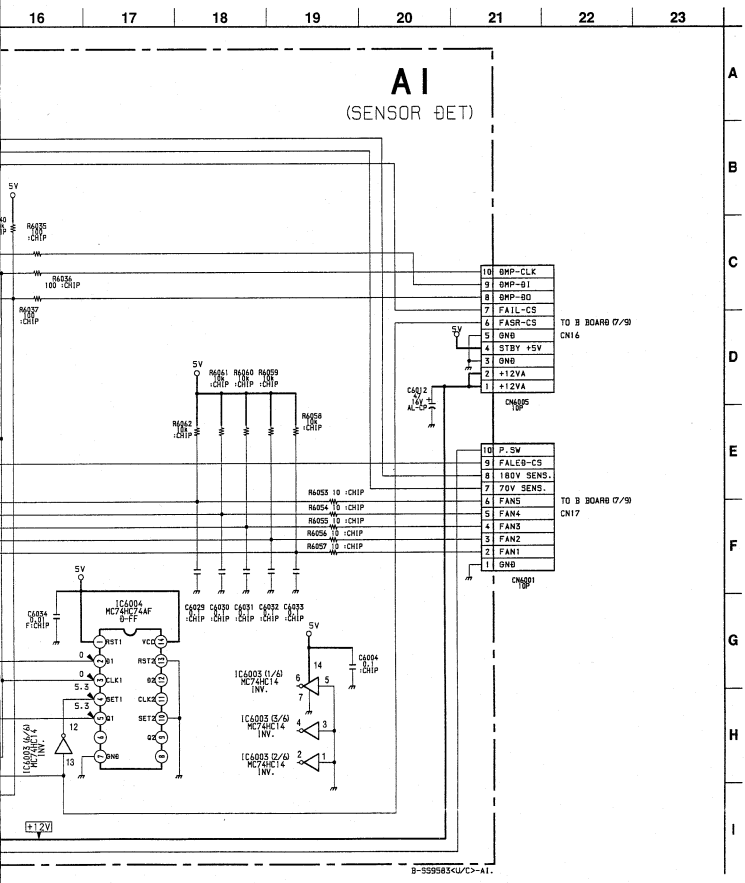

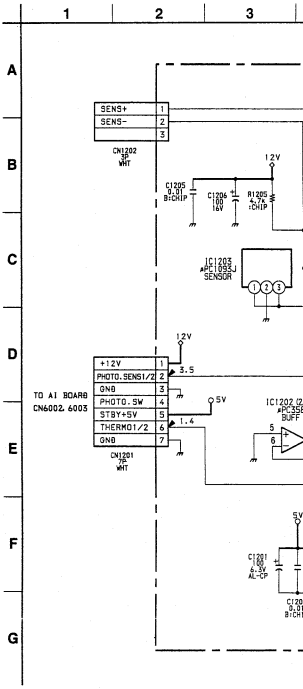

9-18

AI BOARD IC6005
TC7W125FU

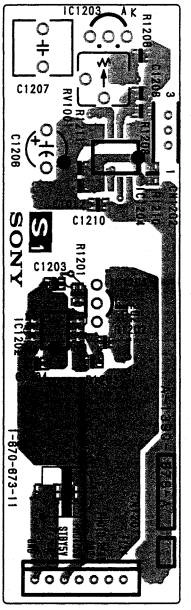

S1 – A SIDE –
SUFFIX: -11

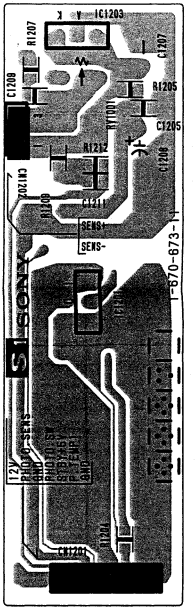

S1 – B SIDE –
SUFFIX: -11

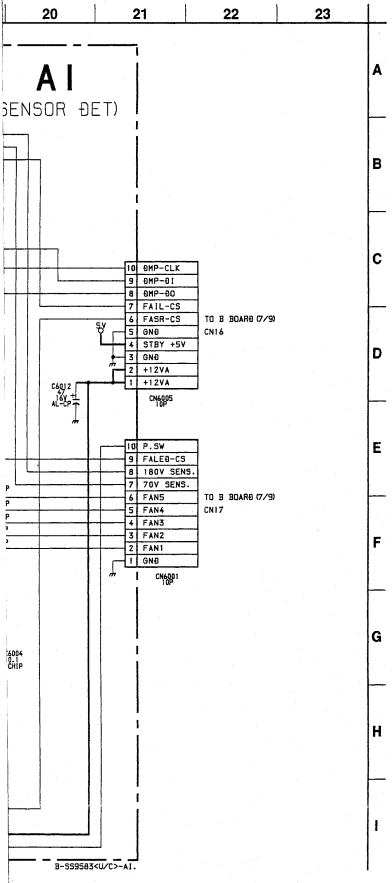

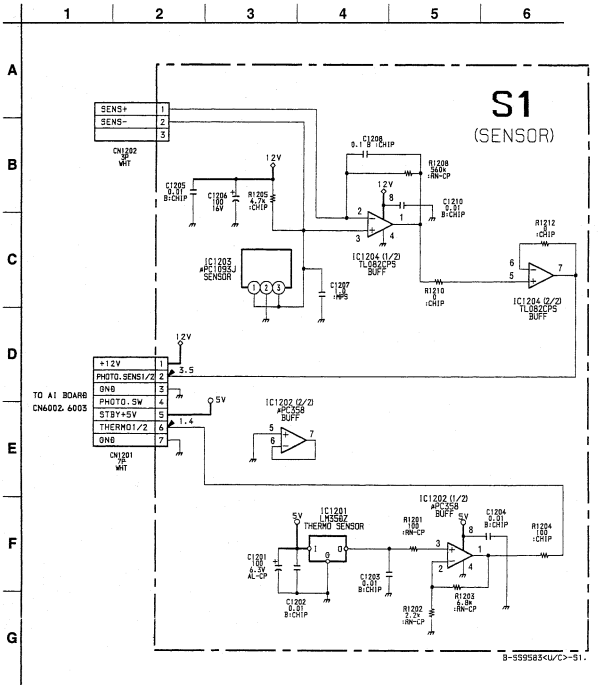

9-18

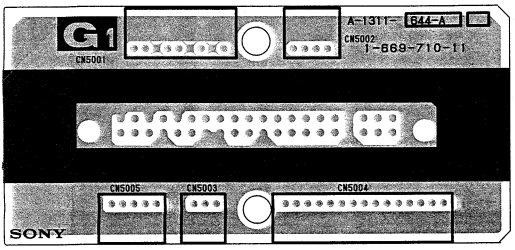

G1 – A SIDE –
SUFFIX: -11

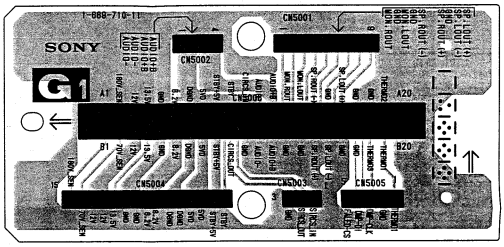

G1 – B SIDE –
SUFFIX: -11

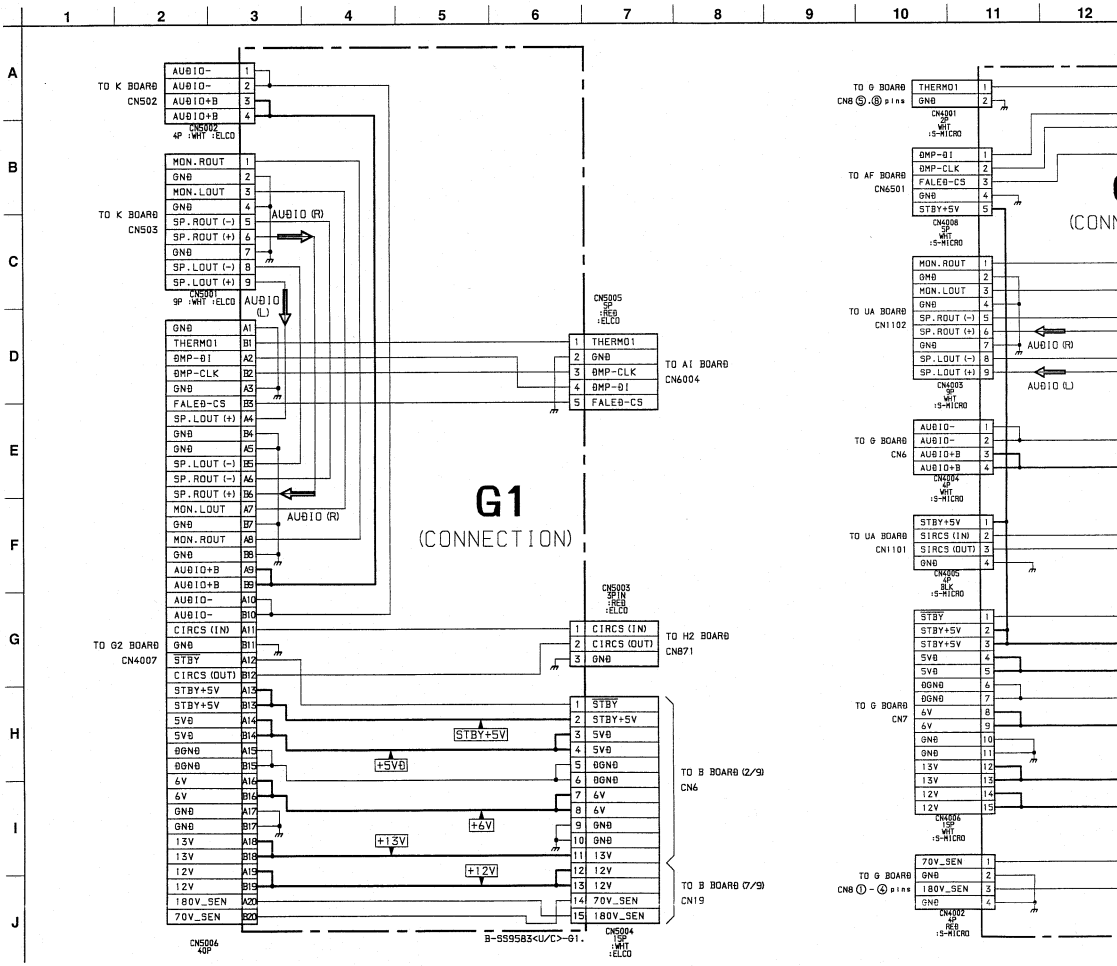

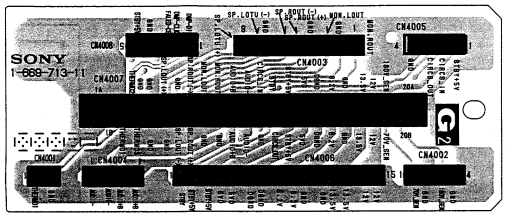

G2 – B SIDE –
SUFFIX: -11

G2
(CONNECTION)

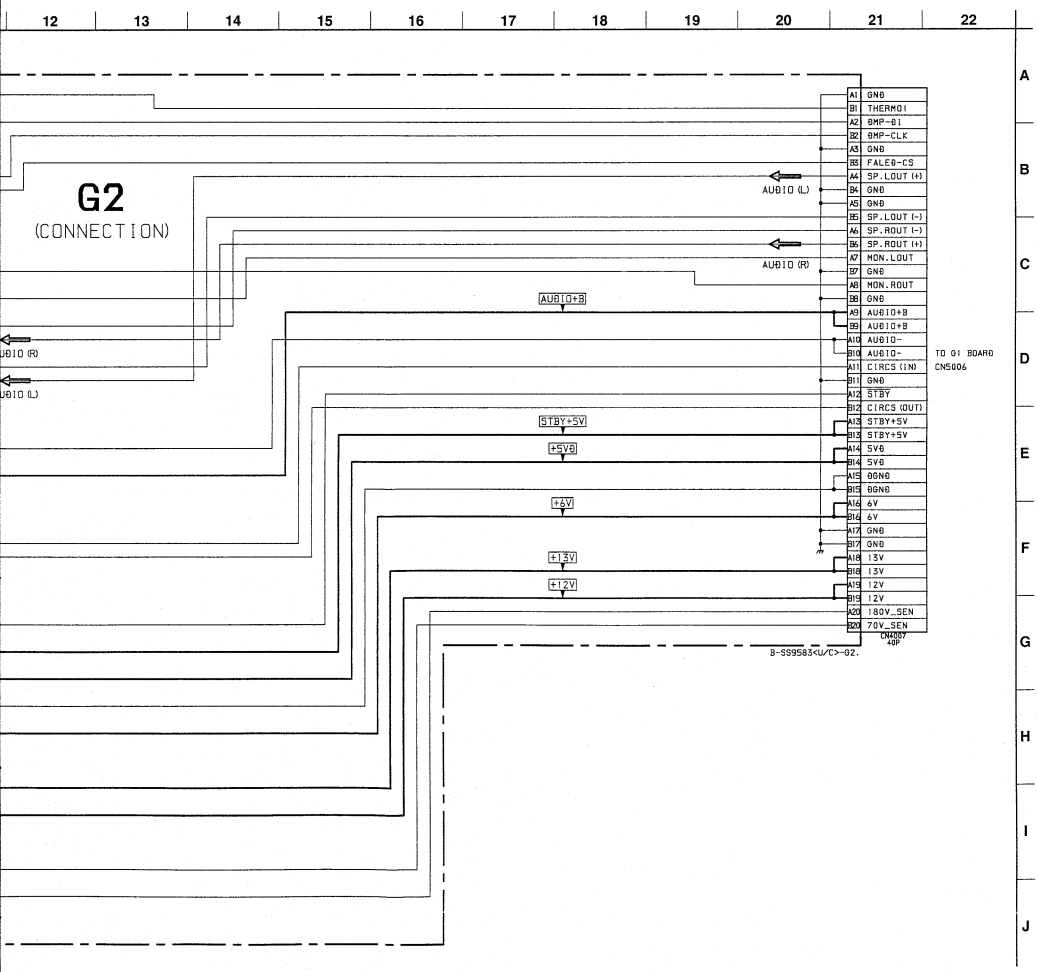

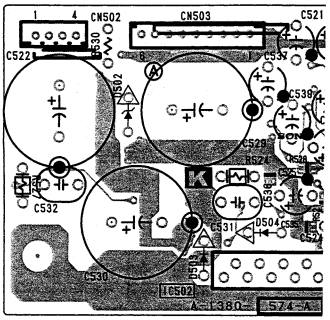

K BOARD IC501 TA8184F

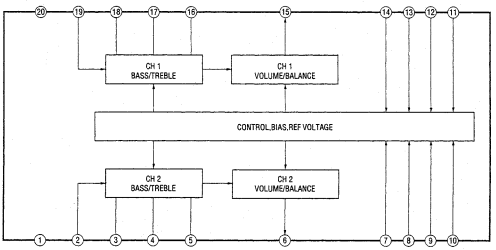

K BOARD IC502 TA8216H

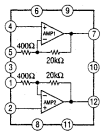

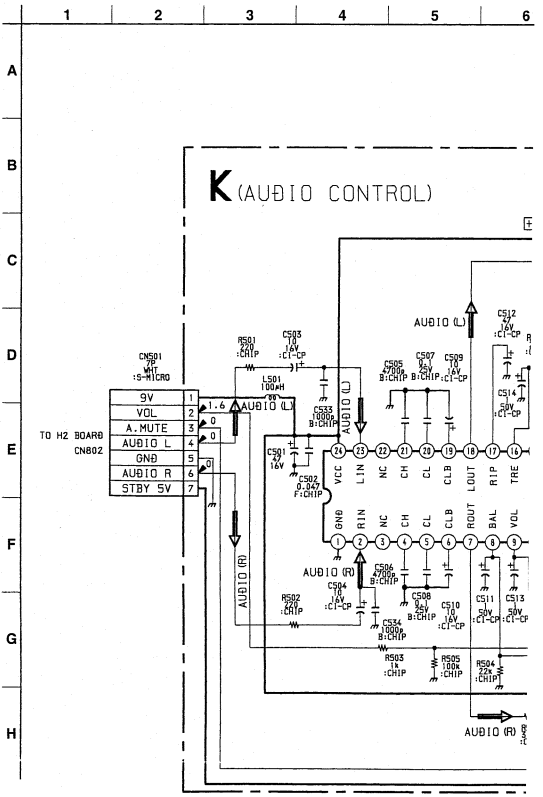

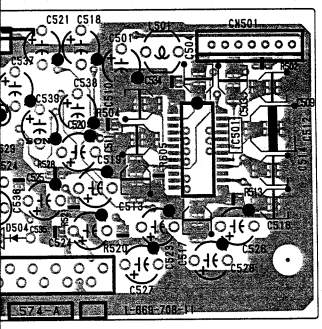

K – A SIDE –
SUFFIX: -11

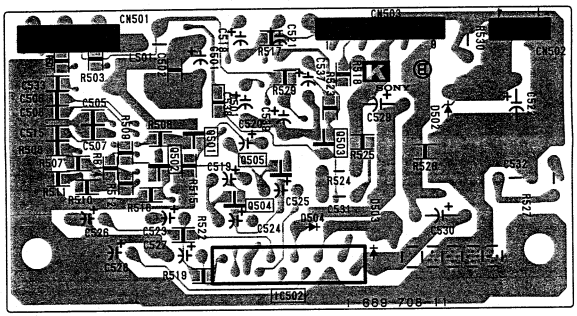

K – B SIDE –
SUFFIX: -11

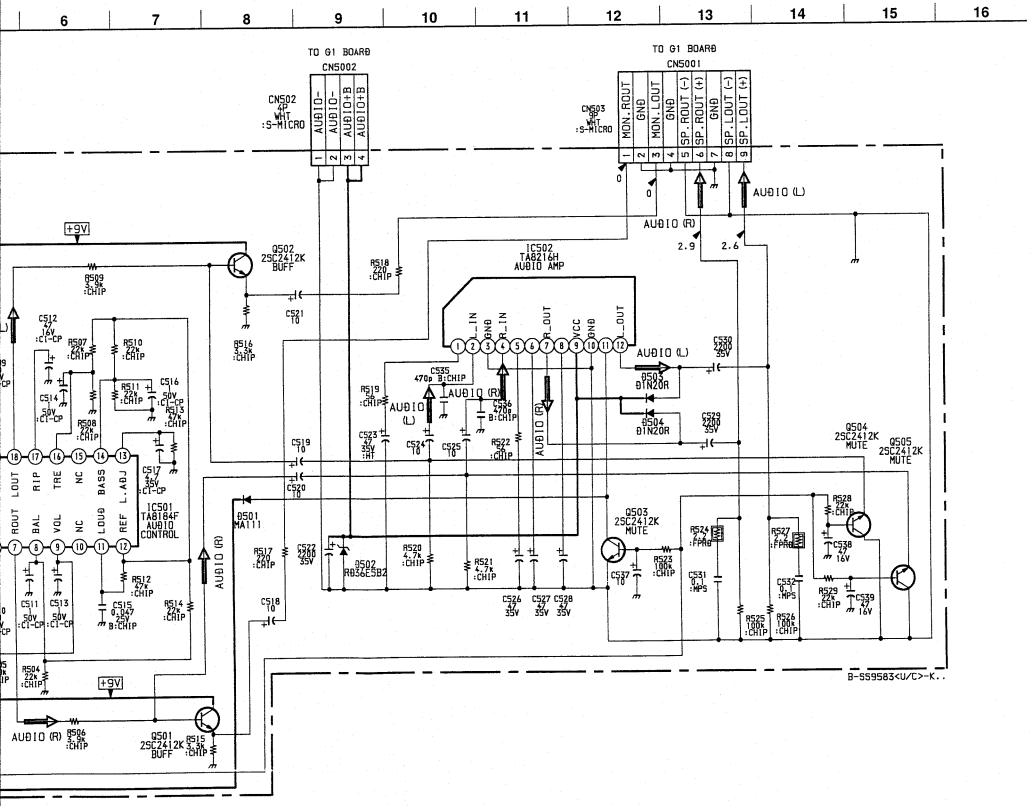

9-20

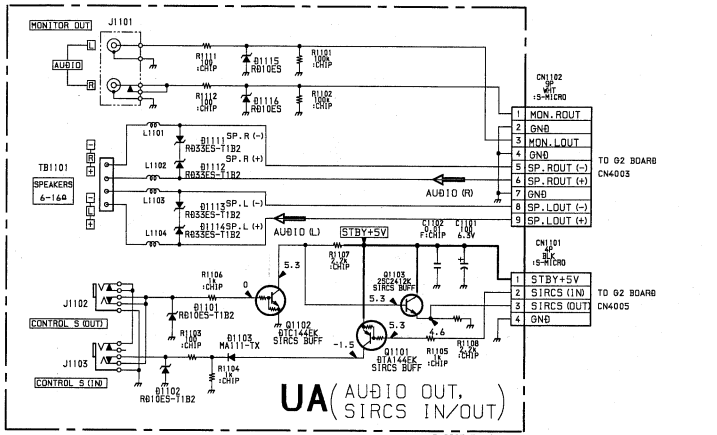

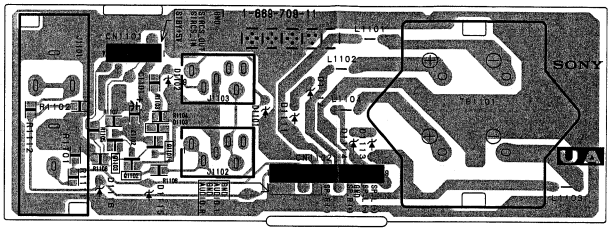

UA – B SIDE –
SUFFIX: -11

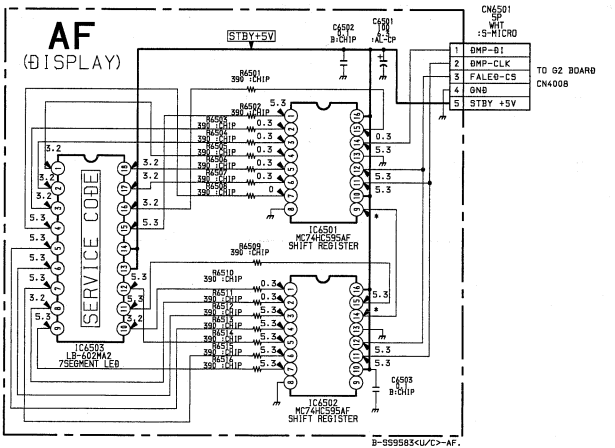

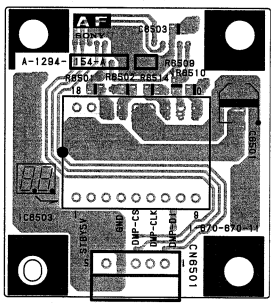

AF – A SIDE –
SUFFIX: -11

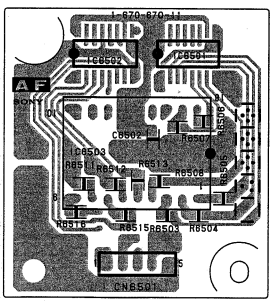

AF – B SIDE –
SUFFIX: -11

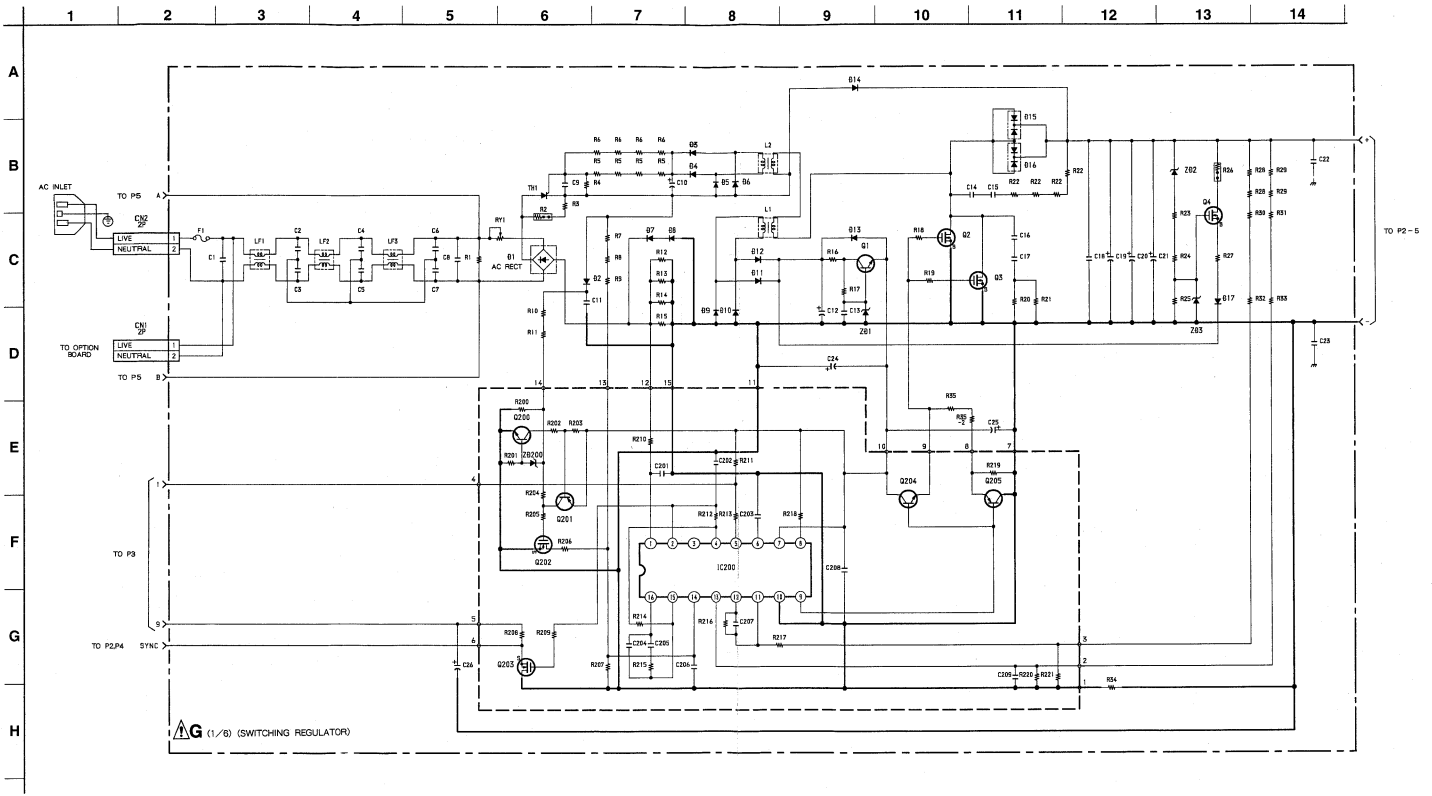
AC INLET
TO P5
CN2 2P
LIVE
NEUTRAL
CN1 2P
TO OPTION BOARD
TO P3
TO P2,P4
SYNC
TO P2-5
AC RECT
IC200
G (1/6) (SWITCHING REGULATOR)

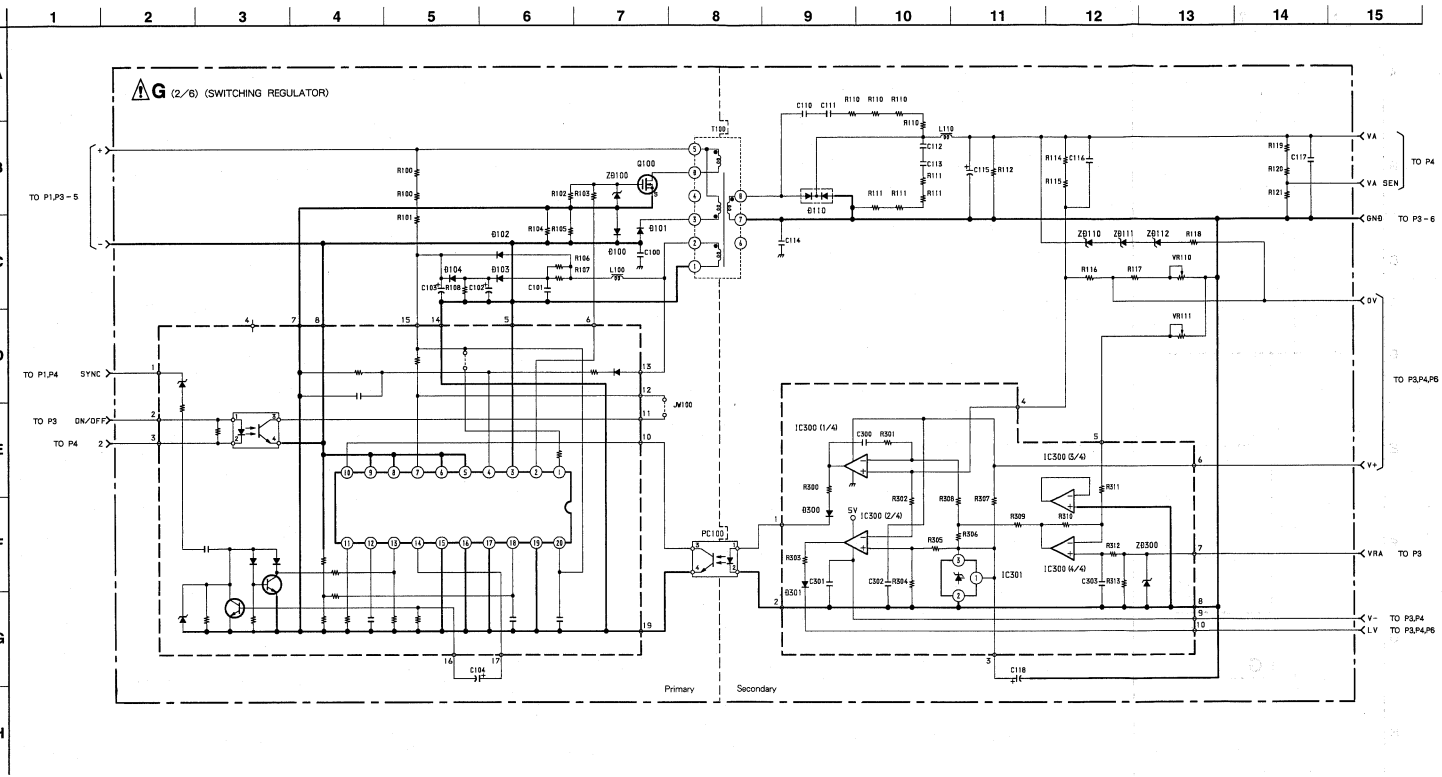
G (2/6) (SWITCHING REGULATOR)
TO P1,P3 - 5
TO P1,P4
SYNC
TO P3
ON/OFF
TO P4
Q100
ZB100
B100
B101
B102
B103
B104
T100
PC100
JW100
IC300 (1/4)
IC300 (2/4)
IC300 (3/4)
IC300 (4/4)
IC301
B300
B301
ZB300
VR110
VR111
VA
VA SEN
GND
TO P4
TO P3 - 6
0V
V+
TO P3,P4,P6
VRA
TO P3
V-
LV
TO P3,P4
TO P3,P4,P6
Primary
Secondary

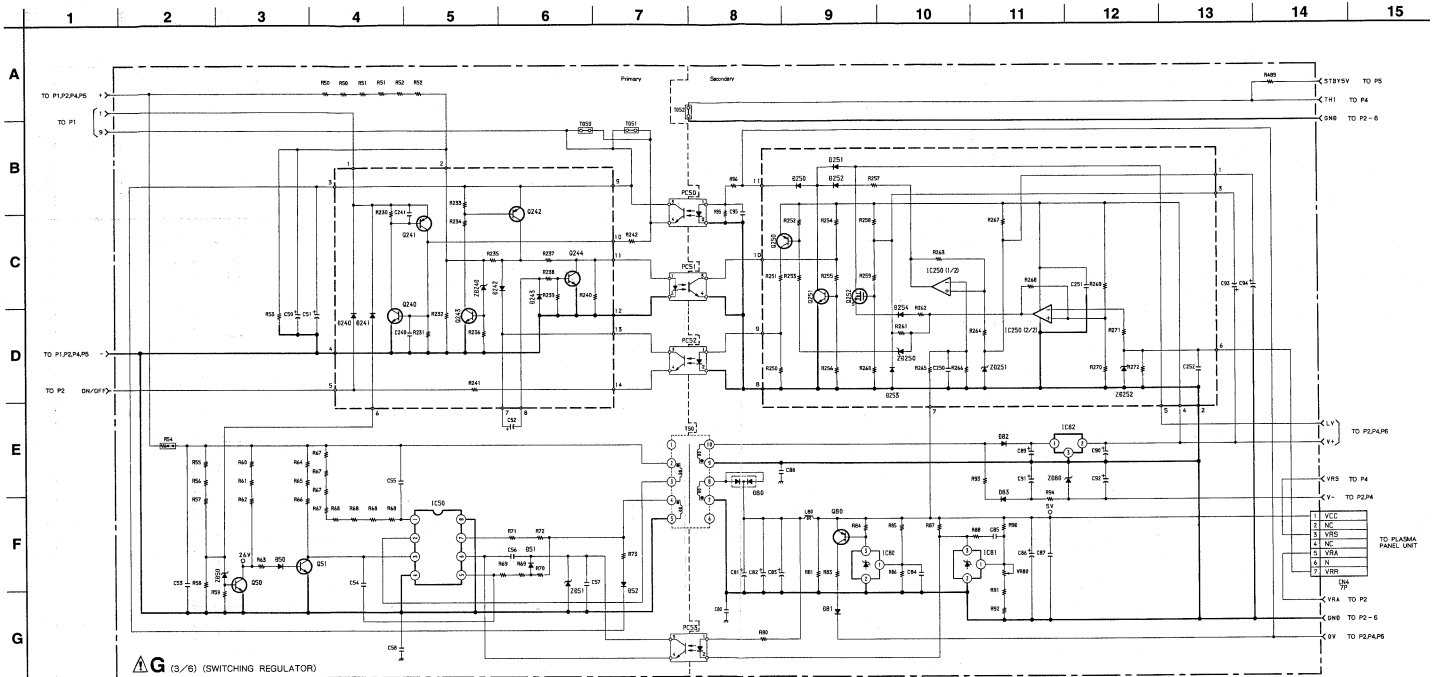
Primary
Secondary
TO P1,P2,P4,P5
TO P1
TO P2
ON/OFF
STBYSV TO P5
TH1 TO P4
GND TO P2-6
LV TO P2,P4,P6
VS TO P2,P4,P6
VRS TO P4
V- TO P2,P4
TO PLASMA PANEL UNIT
VRA TO P2
GND TO P2-6
6V TO P2,P4,P6
IC250 (1/2)
IC250 (2/2)
G (3/6) (SWITCHING REGULATOR)

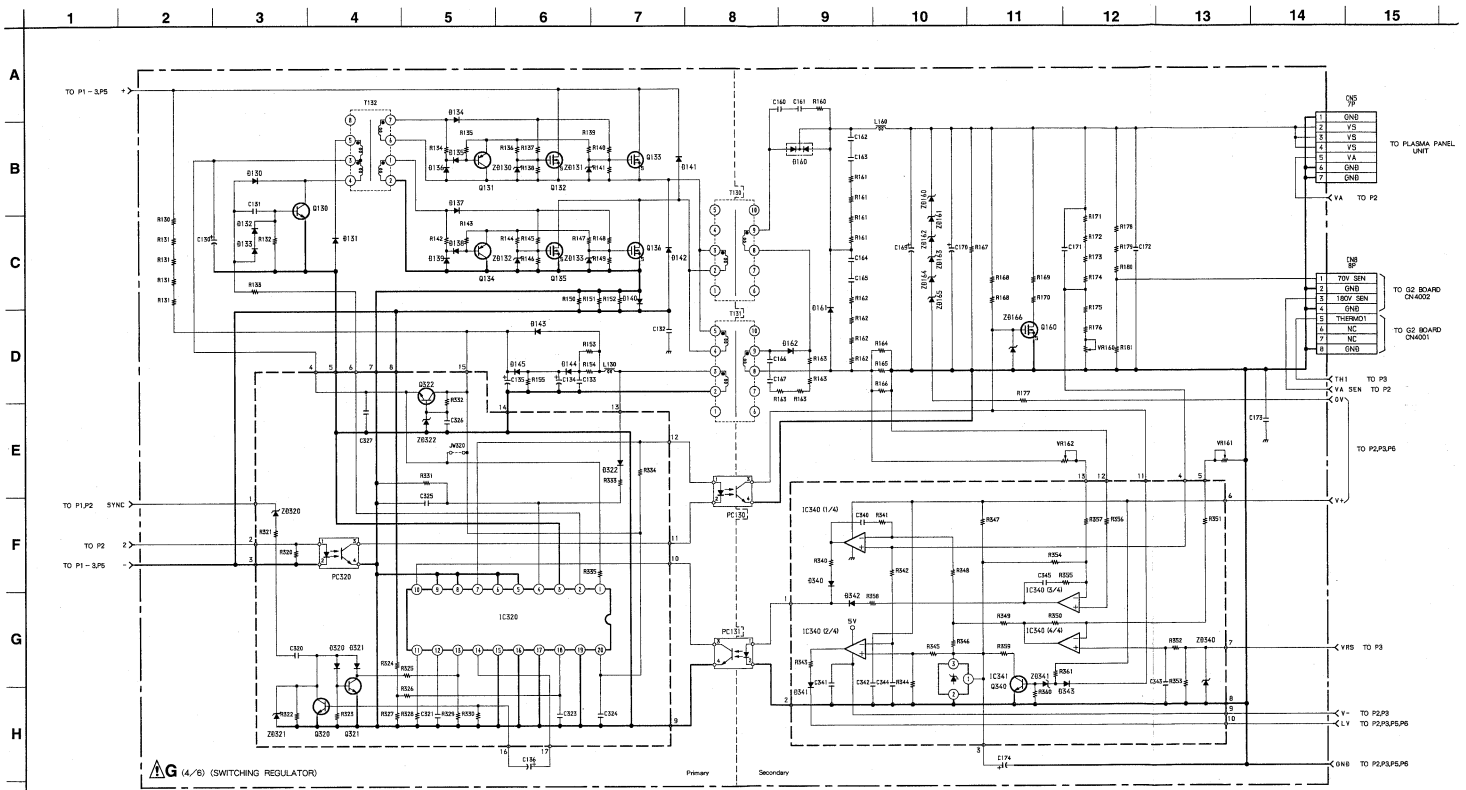
TO P1 - 3,P5 +
TO P1,P2 SYNC
TO P2
TO P1 - 3,P5 -
TO PLASMA PANEL UNIT
TO G2 BOARD CN4002
TO G2 BOARD CN4001
TH1 TO P3
VA SEN TO P2
TO P2,P3,P6
VRS TO P3
V- TO P2,P3
TO P2,P3,P5,P6
G (4/8) (SWITCHING REGULATOR)
Primary
Secondary

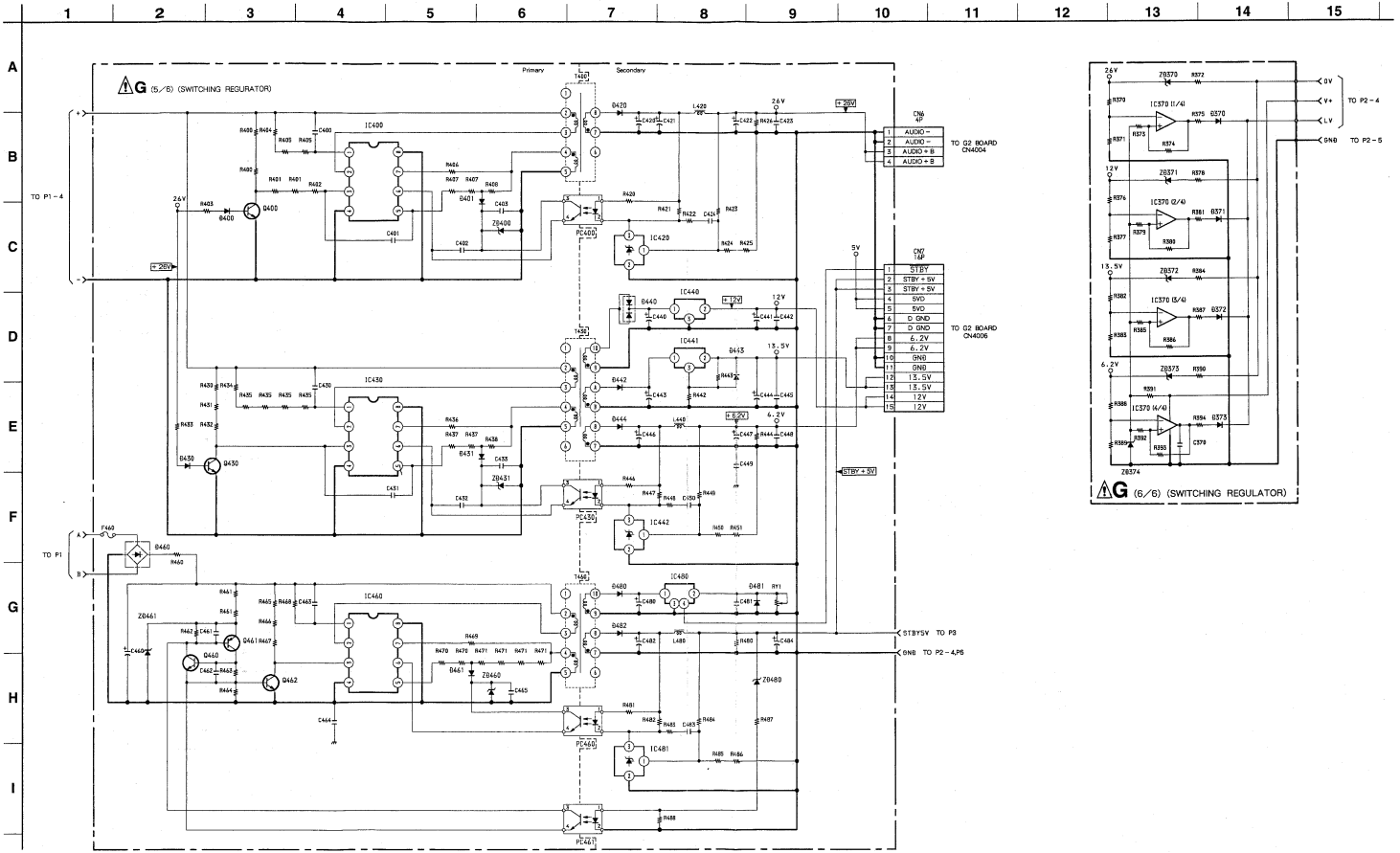
G (5/6) (SWITCHING REGURATOR)
Primary
Secondary
TO P1-4
TO P1
CN6 4P
AUDIO -
AUDIO -
AUDIO + B
AUDIO + B
TO G2 BOARD CN4004
CN7 16P
STBY
STBY + 5V
STBY + 5V
5VD
5VD
D GND
D GND
6.2V
6.2V
GND
GND
13.5V
13.5V
12V
12V
TO G2 BOARD CN4006
STBY+5V
STBY5V TO P3
GND TO P2-4,P5
G (6/6) (SWITCHING REGULATOR)
0V
V+
LV
GND
TO P2-4
TO P2-5